TALCO FIRE SYSTEMS
RESIDENTIAL & COMMERCIAL FIRE PUMP SPECIALISTS
6040 NE 112TH AVE. PORTLAND, OREGON 97220
PHONE: 800-878-8055 WWW.TALCOFIRE.COM

ULR-C-300

300 GPM @ 95 PSI

30HP, 208V, 3PH

ACROSS THE LINE CONTROLLER

Project:

Contractor:

Submittal Packet

TALCO FIRE SYSTEMS
RESIDENTIAL & COMMERCIAL FIRE PUMP SPECIALISTS
6040 NE 112TH AVE. PORTLAND, OREGON 97220
PHONE: 800-878-8055 WWW.TALCOFIRE.COM

FIRE PUMP PACKAGE
SUBMITTAL DATA SHEET

ULR-C 300

PUMP LISTED CONDITIONS:	300 GPM @ 95 PSI
PUMP MODEL:	AURORA 3-383-9B VERTICAL INLINE
ELECTRIC MOTOR:	30HP, 208V, 3PH, 60HZ
FLANGES:	125# / 125#
MAIN CONTROLLER:	TORNATECH GPA 30HP, 208V, 3PH ACROSS THE LINE *W/ OPT D-39 AMBIENT TEMPATURE RATING* *NEMA 2 ENCLOSURE*
HOSE VALVE:	N/A
JOCKEY PUMP:	GRUNDFOS CM1-7 1.5HP, 208V, 3PH
JOCKEY CONTROLLER:	TORNATECH JPLT 1.5HP, 208V, 3PH

ULR-C-300

NFPA-20 Fire Pump & Controller

Packaged Fire Pump System

3-383-9

300GPM

Test Port, City Bypass

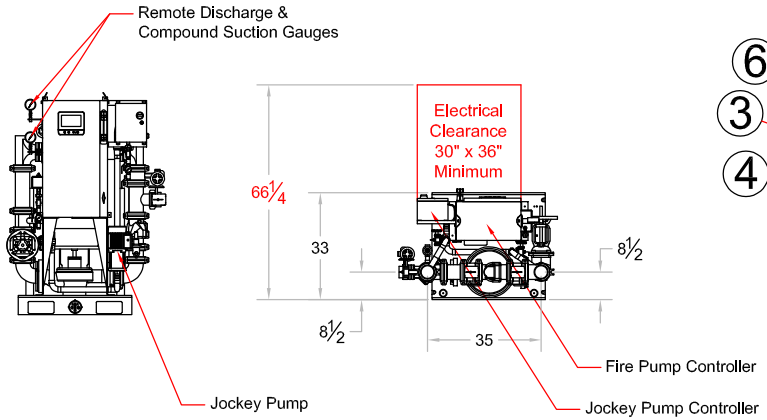

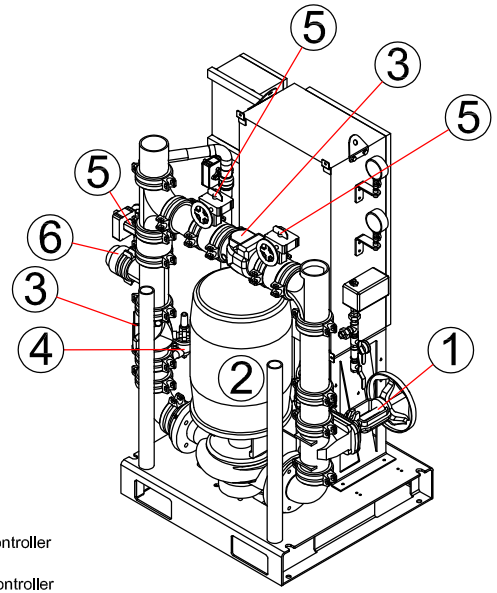

System Components

1	OS&Y Gate Valve
2	Inline Pump & Motor
3	Check Valve
4	Case Relief Valve
5	Monitored Butterfly
6	3" Test Connection

Design Conditions:

300GPM@95PSI

30HP, 208V, 3PH

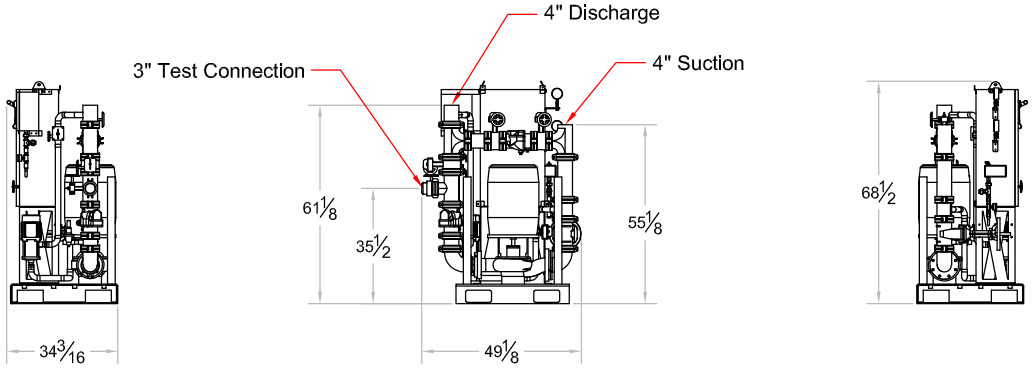

Sensing Line Detail

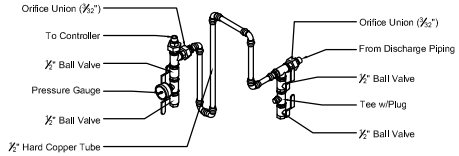

Pressure Sensing Lines constructed in accordance with NFPA 20:
All brass or copper components, orifice unions at connections to both discharge piping & controller valve assembly, minimum 60" hard copper tubing.

Jockey System Detail

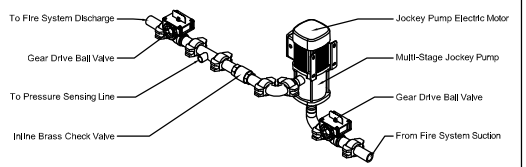

Jockey Pump System constructed in accordance with NFPA 20:
All components 1¼", Grooved end or NPT fittings.

Controller: Tornatech GPA 30HP, 208V, 3PH

Jockey Pump: Grundfos CM1-7 1.5HP, 208V, 3PH

Jockey Controller: Tornatech JPLT 1.5HP, 208V, 3PH

Suction x Discharge: 4" Grooved Connections

All dimensions inches - Not certified for construction purposes.

TALCO FIRE SYSTEMS

RESIDENTIAL & COMMERCIAL FIRE PUMP SPECIALISTS
6040 NE 112TH AVE. PORTLAND, OREGON 97220
PHONE: 800-878-8055 WWW.TALCOFIRE.COM

ULR-C-300

RIGHT HAND SUCTION

300GPM

Test Port, City Bypass

NFPA-20 Fire Pump & Controller

Packaged Fire Pump System

3-383-9

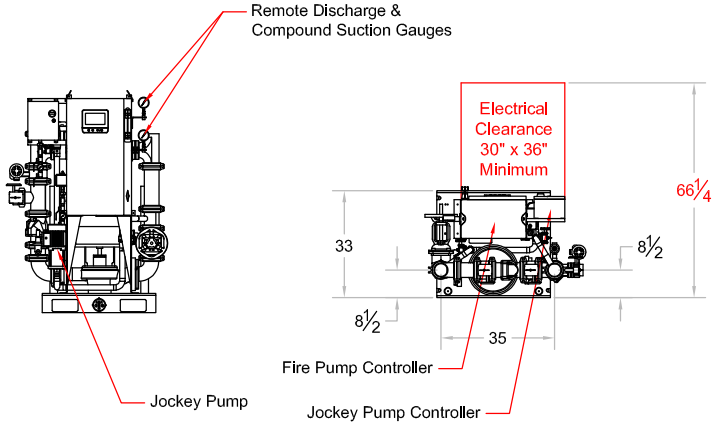

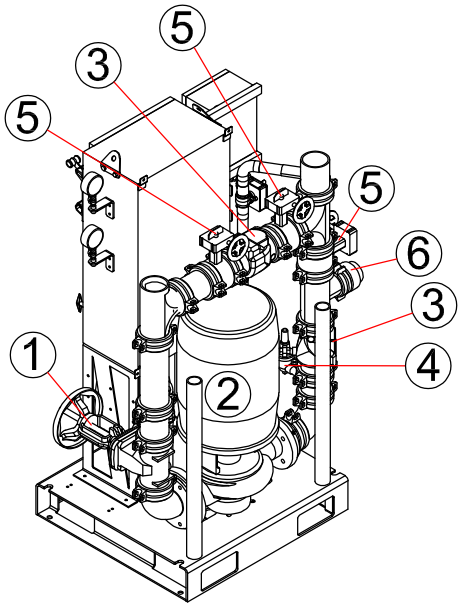

System Components

1	OS&Y Gate Valve
2	Inline Pump & Motor
3	Check Valve
4	Case Relief Valve
5	Monitored Butterfly
6	3" Test Connection

Design Conditions:

300GPM@95PSI

30HP, 208V, 3PH

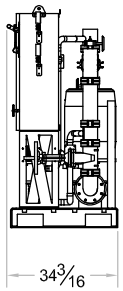

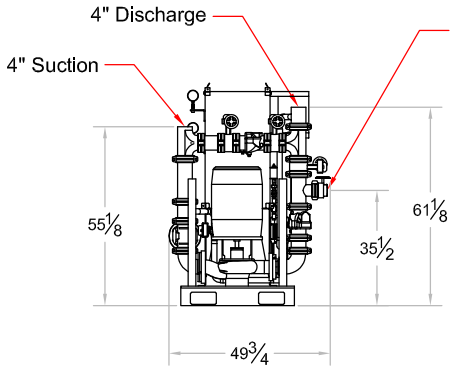

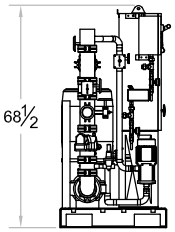

Sensing Line Detail

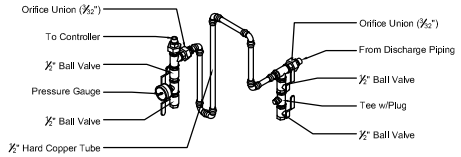

Pressure Sensing Lines constructed in accordance with NFPA 20:
All brass or copper components, orifice unions at connections to both discharge piping & controller valve assembly, minimum 60" hard copper tubing.

Jockey System Detail

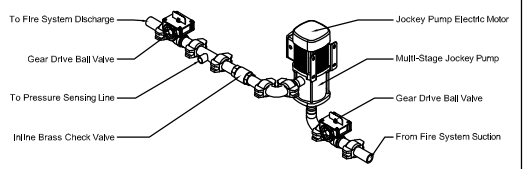

Jockey Pump System constructed in accordance with NFPA 20:
All components 1¼", Grooved end or NPT fittings.

Controller: Tornatech GPA 30HP, 208V, 3PH

Jockey Pump: Grundfos CM1-7 1.5HP, 208V, 3PH

Jockey Controller: Tornatech JPLT 1.5HP, 208V, 3PH

Suction x Discharge: 4" Grooved Connections

All dimensions inches - Not certified for construction purposes.

TALCO FIRE SYSTEMS

RESIDENTIAL & COMMERCIAL FIRE PUMP SPECIALISTS
6040 NE 112TH AVE. PORTLAND, OREGON 97220
PHONE: 800-878-8055 WWW.TALCOFIRE.COM

Fire Pump Data:

900 Series
Single Stage Inline Fire Pumps

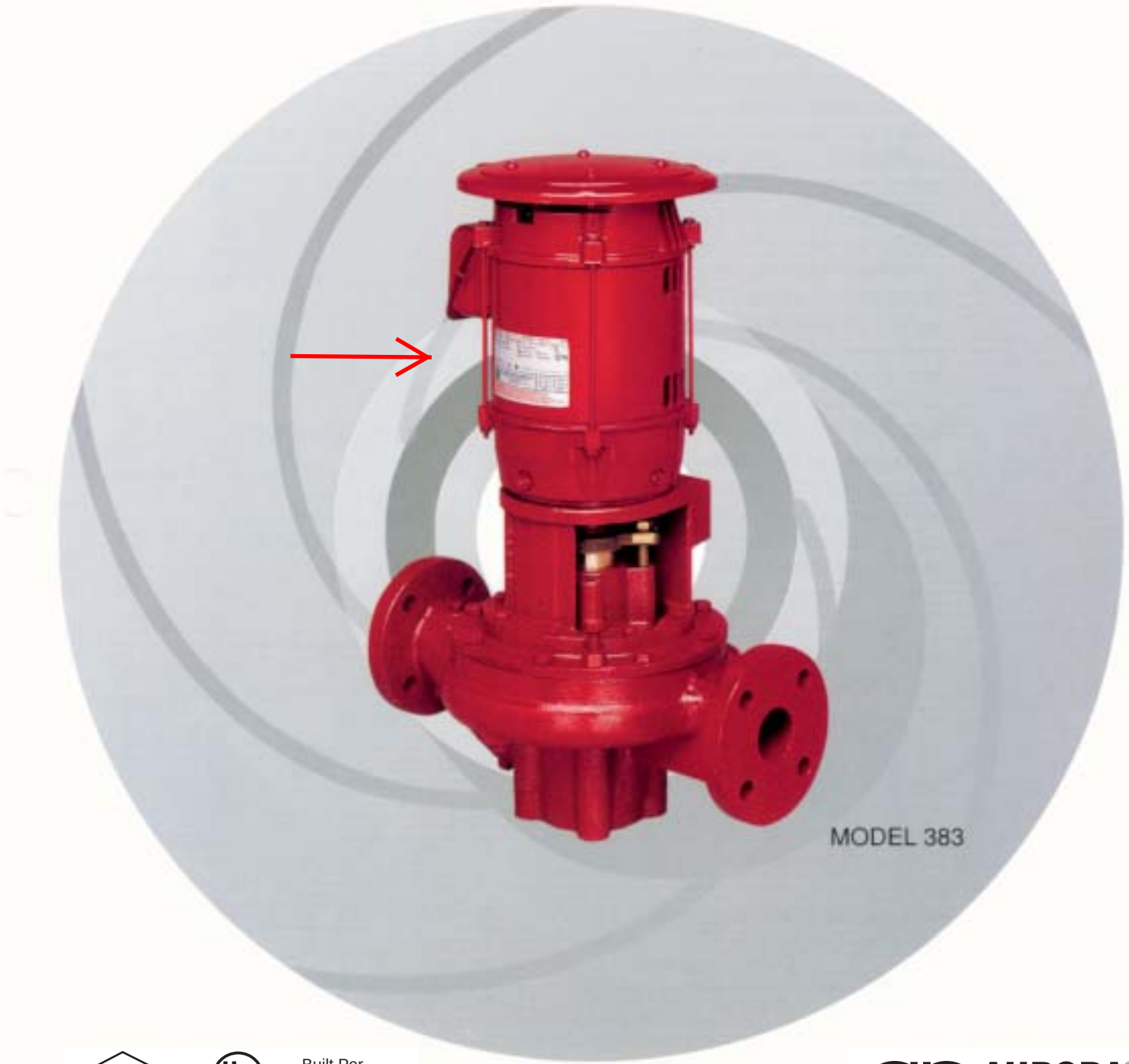

FM Approved

UL Listed

Built Per N.F.P.A. 20

AURORA®
PENTAIR PUMP GROUP

Aurora 383 Series Pumps

VERTICAL Inline Close Coupled Fire Pumps are specifically designed for vertical mounting. The suction and discharge nozzles are located on the same centerline 180° apart. Vertical pumps significantly reduce required mounting space. They are easy to maintain. Simply remove eight capscrews and the motor and bracket assembly is easily removed fiom the casing without disturbing the piping. The impeller is direct coupled to the motor shaft for easy maintenance, to minimize impeller run out and to reduce noise.

The inline casing is heavily ribbed to resist pipe strain and is provided with a support to simplify mounting to a base or foundation. Packing is provided when suction pressure is greater than 30 PSIG; packing with lantern ring and flush line is furnished for suction pressures of 30 PSIG or less. Look through this bulletin for additional details & specifications.

Back pull-out inline case design simplifies disassembly. The suction and discharge piping or alignment is not disturbed as the casing remains in the pipeline. Simply remove the motor and bracket assembly for service or inspection.

Computer machined major components with 360° registered fits assure parts concentricity.

Note: Front case wearing rings are standard on all size pumps. Rear case rings are standard on all sizes except the 2x2x9C. The 2x2x9C does not require a wear ring.

STANDARD

Bronze fitted pump construction
Bronze shaft sleeve
Split bronze packing gland
Carbon steel shaft
125# ANSI flange drilling
Dynamically balanced vacuum cast impeller
Stainless Steel impeller screw & washer
Bronze case wearing ring(s)
Graphite impregnated acrylic packing
Motor:
NEMA-HI JP
Factory performance tested in accordance with NFPA-20

ACCESSORIES

Suction and discharge pressure gauges
Air release valve
Circulation relief valve
Hose valve header
Hose valves
Flow meter
Jockey pump
Optional flange drillings
125 lb suction - 250 lb discharge
250 lb suction and discharge

1 BACK PULL-OUT CASING with inline suction and discharge.

2 CASE WEARING RING prevents wear on casing and is easily and inexpensively replaced.

3 SUPPORT simplifies mounting. The pump can be fastened to the floor, a base or foundation.

4 DYNAMICALLY BALANCED IMPELLER is keyed to the shaft and secured by a capscrew and washer. Vacuum casting and quality controlled manufacturing process assures consistent high performance. Enclosed design provides high efficiency and low wear for long service life.

5 CARBON STEEL SHAFT is designed for minimum deflection at maximum load.

6 TWO PIECE BRONZE PACKING GLAND provides easy packing maintenance.

7 FACTORY PERFORMANCE TEST guarantees performance at specified pump operating conditions.

8 FLUSH LINE with valve (when used) from discharge provides easy water seal adjustment to lantern ring.

9 BRONZE SHAFT SLEEVE extends full length of stuffing box to protect motor shaft. The shaft sleeve is slip fit over the shaft and then is keylocked. Shaft sleeve and impeller screw are sealed by “O”-ring gaskets to eliminate corrosion of the shaft by the pumped liquid.

10 STANDARD MOTOR approved for 383 Series pump service by NEMA and the HYDRAULIC INSTITUTE provides low noise level pump operation.

11 VOLUTE TYPE SUCTION inlet pre-rotates suction liquid.

Vertical Fire Pump Features

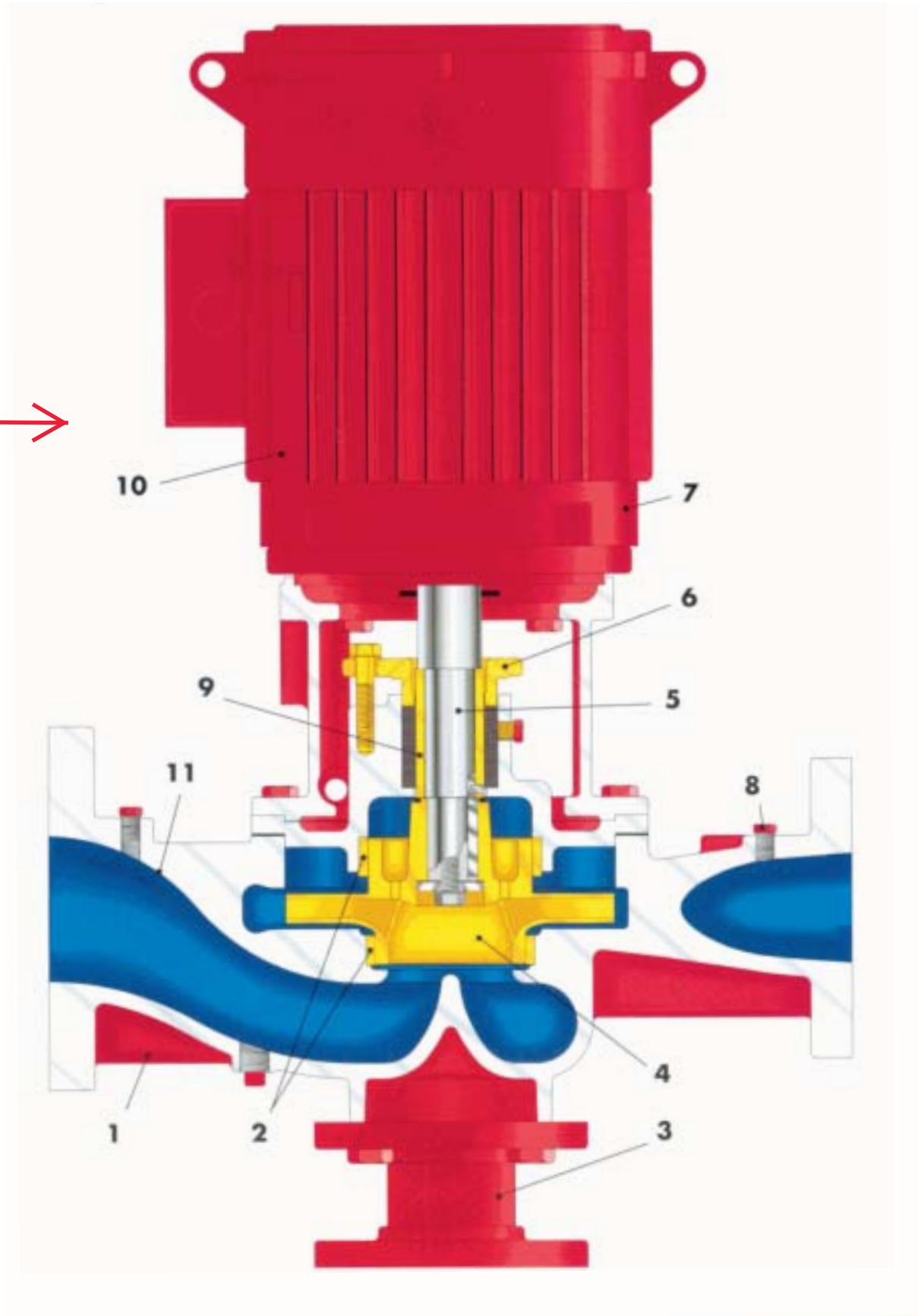

Customer : TALCO INDUSTRIES, INC.
Project name : Default

Pump Performance Curve

Encompass 3.0 - 26.5.0

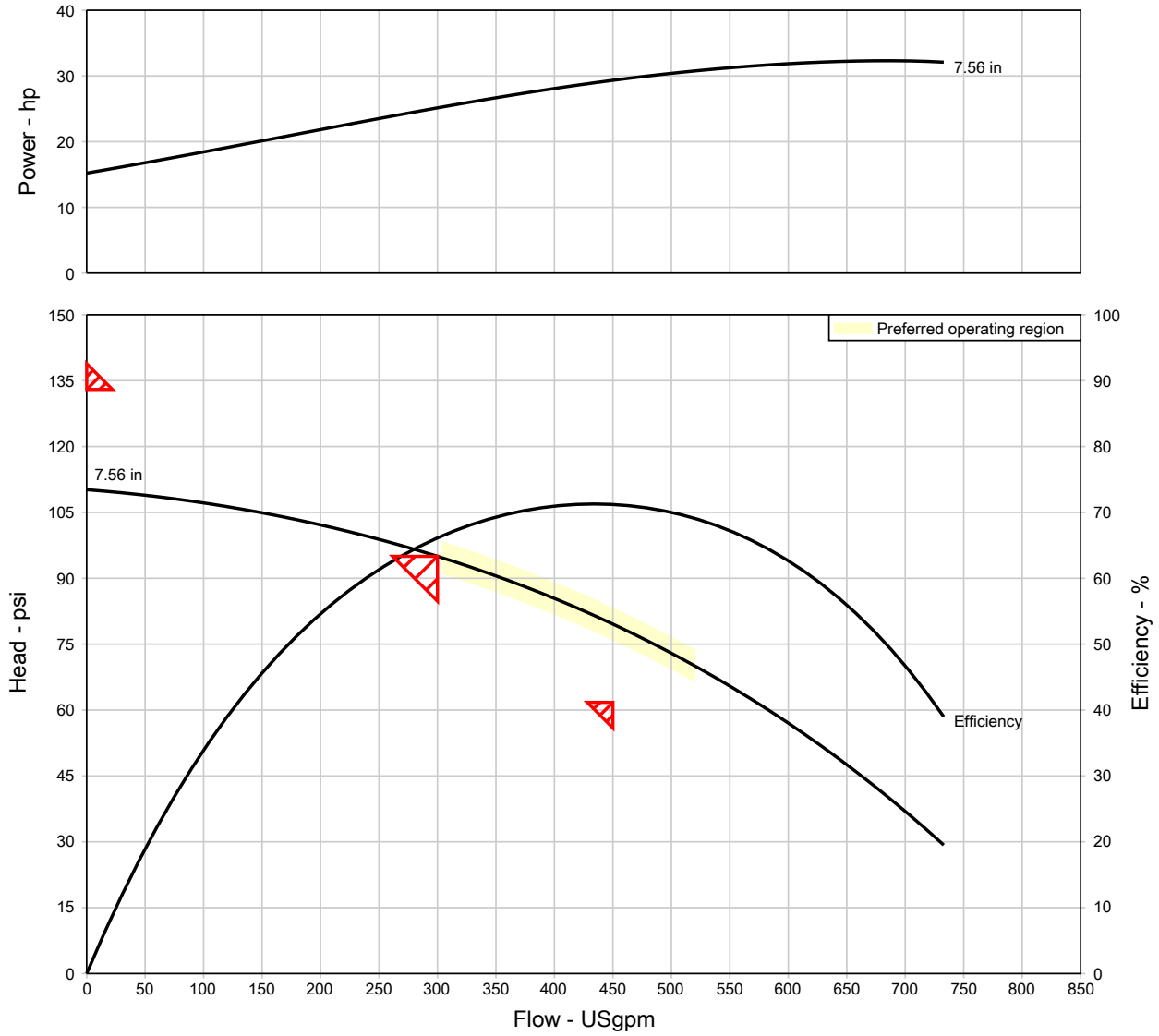

Item Number / Tags	: 001
Service	:
Quantity	: 1
Quote number	: 243627
Date last saved	: 29 Jul 2026 6:27 PM
Flow, rated	: 300.0 USgpm
Differential head / pressure, rated	: 95.00 psi
Flange rating (suction / discharge)	: 125/125
Secondary Point (150% of rated flow)	: 450.0 USgpm
Secondary Point (65% of rated head)	: 61.75 psi
Max Shutoff per NFPA	: 133.0 psi

Size	: 3-383-9B
Stages	: 1
Driver type	: Motor
Frequency	: 60 Hz
Speed, rated	: 3560 rpm
Based on curve number	: 383-3x4x9B-3550-new Rev 20250709
Efficiency	: 66.13 %
Max working pressure, allowable	: 175.0 psi.g
Max Shutoff Head (Calculated)	: 110.7 psi
Max suction pressure, allowable	: 64.34 psi.g
Suction pressure, max (user specified)	: 10.00 psi.g
Pump shutoff w/ suction pressure	: 120.7 psi.g
Power driver, minimum	: 30.00 hp

General Arrangement

WARNING

DO NOT OPERATE THIS MACHINE WITHOUT PROTECTIVE GUARD IN PLACE. ANY OPERATION OF THIS MACHINE WITHOUT PROTECTIVE GUARD CAN RESULT IN SEVERE BODILY INJURY.

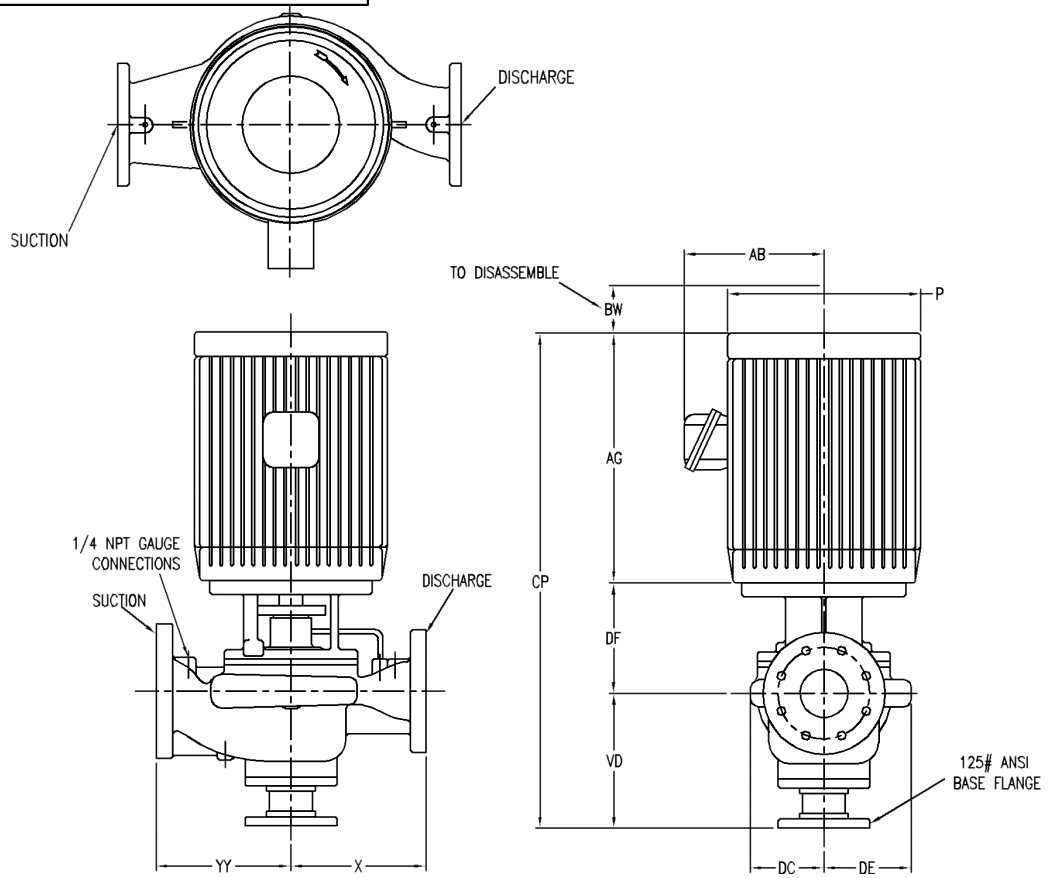

X	YY	BW	VD	DF	DC
11.00	11.00	4.25	10.88	9.25	5.75

DE	AG	P	AB	CP	Base Flange Size
6.63	22.00	15.75	11.38	38.13	3.00

NOTES:

Not for construction, installation, or application purposes unless certified.

All dimensions are in inches

Dimensions may vary ± .38" (10mm) due to normal manufacturing tolerances.

See configuration for estimated total weight.

Pump Data	
Series	Inline
Model	3-383-9B
Size	3x4x9
Flow	300.0 USgpm
Rated Pressure	95.00 psi.g
RPM	3560 rpm
Rotation	Right handed
Liquid Type	Water
Discharge Size	3.00 in
Suction Size	4.00 in
Impeller Diameter	7.50 in
Connection Type	125/125
Base Type	Pipe flange support
-	-
Pump Materials of Construction	
Pump	Bronze fitted with Cast Iron casing
Shaft	Carbon Steel
Motor Data	
Power	30.00 hp
Phase	3
Frequency	60 Hz
Volts	200 V
RPM	3560
Frame	284JP
Service Factor	1.15
Enclosure	ODP
Manufacturer	Weg
Site Information	
Elevation	300.0 ft
Temperature	77.00 deg F
Estimated Weights	
Pump	170.0 lb
Driver	281.0 lb

Quote Information			
Customer	TALCO INDUSTRIES, INC.		
Customer Quote	0		
Job Name	Default		
Market	-		
PENTAIR		Quote Item	001
		Quote Date	10 Oct 2023

General Purpose Gauges
Series P-500

DESCRIPTION

U.S. Gauge Series P-500 utility gauges provide economical, reliable service in a wide variety of applications including pumps, compressors, and other equipment.

Series P-500 utility gauges come in English and metric ranges with accuracy of either ±3-2-3% or ±1.6% full scale.

Gauges are available in 1-1/2", 2", 2-1/2", 3-1/2", and 4-1/2" steel cases with a choice of English or metric connections in center-back and lower mount configurations.

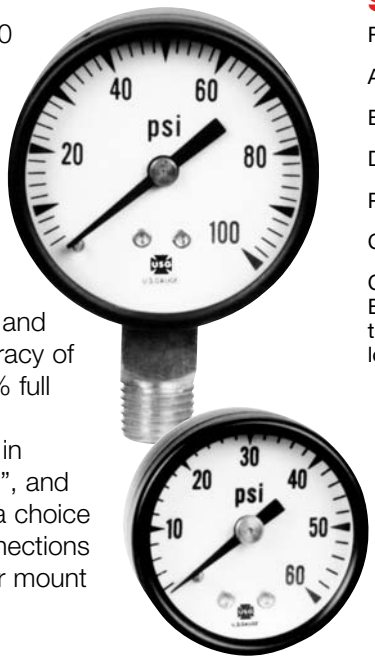

SPECIFICATIONS

RANGES: 30" Hg VAC through 0-5000 psi

ACCURACY: ±3-2-3% (Grade B) or ±1.6% of span

BOURDON TUBE: Phosphor bronze

DIAL: ABS (aluminum optional)

POINTER: Aluminum

CASE: Painted steel

CONNECTION:
Brass, 1/8-27 NPT for 1-1/2" and 2"; 1/4-18 NPT for 2" through 4-1/2"; G1/8B, G1/4B, R1/8, R1/4, center-back or lower mount

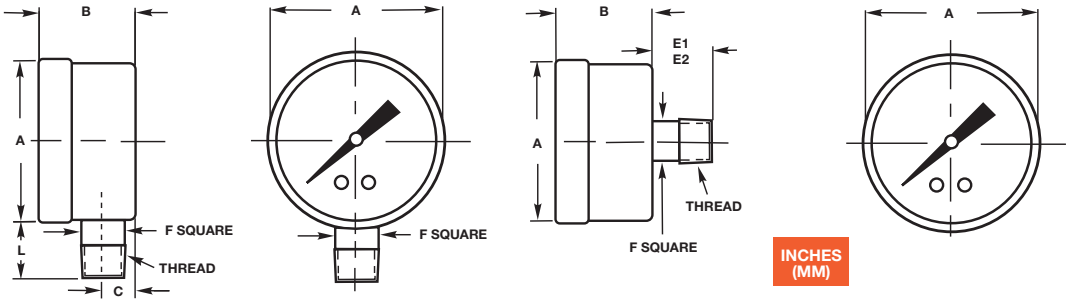

MODEL NUMBER	DIAL SIZE	UNIT	A	B	C	E1	E2	F	L
P-500	1-1/2"	inches	1.64	.92	.34	.62	–	.44	.55
		mm	41.66	23.37	8.66	15.75	–	11.18	13.97
P-500	2"	inches	2.16	1.15	.40	.84	.90	.55	.87
		mm	54.86	29.21	10.16	21.34	22.86	13.97	22.10
P-505	2-1/2" LM	inches	2.73	1.15	.39	.48	.25	.82	–
		mm	69.34	29.21	9.91	12.19	6.35	20.83	–
P-505	2-1/2" CBM	inches	2.49	1.21	1.22	–	.28	.84	–
		mm	63.25	30.73	30.99	–	7.11	21.34	–
P-505	3-1/2" LM	inches	3.53	1.17	.40	–	.24	.83	–
		mm	89.66	29.72	10.16	–	6.10	21.08	–
P-505	4-1/2" LM	inches	4.80	1.12	.38	–	.45	1.10	–
		mm	121.92	28.45	9.65	–	11.43	27.94	–

* Length E1 refers to 1/8 NPT connections; E2 refers to 1/4 NPT connections
** The E dimension is the minimum length of the wrench square from the case bottom

© 2006, by AMETEK, Inc. All rights reserved. PDF606 (160126) Specifications are subject to change without notice. Visit our Web sites for the most up-to-date information.

AMETEK®

ISO 9001:2000 CERTIFIED

For Gauges/Thermometers:
U.S. GAUGE
820 Pennsylvania Blvd.
Feasterville, PA 19053 U.S.A.
Tel: (215) 355-6900
Fax: (215) 354-1802
www.ametekusg.com
Customer Service Tel: (863) 534-1504
Customer Service Fax: (863) 533-7465

For Electronic Products:
PMT PRODUCTS
820 Pennsylvania Blvd.
Feasterville, PA 19053 U.S.A.
Tel: (215) 355-6900
Fax: (215) 354-1800
www.ametekusg.com

For Diaphragm Seals:
M&G PRODUCTS
8600 Somerset Drive
Largo, FL 33773 U.S.A.
Tel: (727) 536-7831
Fax: (727) 539-6882
www.ametek.com/tci



General Purpose Gauges
Series P-500

SPEC NUMBER SELECTION GUIDE

Series P-500

Connection	Range*	1-1/2" Spec No.	2" Spec No.	2-1/2" Spec No.	3-1/2" Spec No.	4-1/2" Spec No.
1/8-27 LM	15 psi	146000A	052420A	–	–	–
	30 psi	166327	163931	059306A	–	–
	60 psi	146002A	164005	058129A	–	–
	100 psi	166318	163271	049660A	–	–
	160 psi	146004A	048302A	048536A	–	–
	200 psi	166777	046645A	050852A	–	–
	300 psi	146006A	048363A	046647A	–	–
	600 psi	146007A	–	–	–	–
	1000 psi	146008A	–	–	–	–
	2000 psi	146009A	–	–	–	–
1/8-27 CBM	15 psi	146010A	–	–	–	–
	30 psi	166320	163930	–	–	–
	60 psi	166321	055155A	–	–	–
	100 psi	166322	046776A	–	–	–
	160 psi	166323	070791A	–	–	–
	200 psi	146015A	102673A	–	–	–
	300 psi	146016A	051805A	–	–	–
	600 psi	146017A	–	–	–	–
	1000 psi	146018A	–	–	–	–
	2000 psi	146019A	–	–	–	–
1/4-18 LM	15 psi	–	047615A	047102A	5502A	5546A
	30 psi	–	163149	163278	168536	5804A
	60 psi	–	163269	163279	168537	5551A
	100 psi	–	162988	163280	168538	5554A
	160 psi	–	163270	163281	168539	5559A
	200 psi	–	163147	163282	168540	5561A
DISCHARGE →	300 psi	–			168541	
	400 psi	–	047492A	049611A	5515A	12265A
	600 psi	–	047493A	046648A	5516A	5337A
	1000 psi	–	047494A	047496A	5519A	12266A
	2000 psi*	–	–	171398A	–	–
	3000 psi*	–	–	171400A	–	–
	5000 psi*	–	–	143072A	–	–
1/4-18 CBM	15 psi	–	046987A	052827A	–	–
	30 psi	–	163949	165213	–	–
	60 psi	–	163272	165214	–	–
	100 psi	–	163273	163284	–	–
	160 psi	–	163274	163285	–	–
	200 psi	–	163275	163286	–	–
	300 psi	–	163276	163287	–	–
	600 psi	–	046991A	050851A	–	–
	1000 psi	–	–	050870A	–	–
	2000 psi*	–	–	171399A	–	–
	3000 psi*	–	–	171401A	–	–
1/8-27 LM	30" - 15 psi	–	66662A	–	–	–
	30" - 60 psi	–	47925A	–	–	–
	30" - 150 psi	–	49609A	–	–	–
1/4-18 LM	30" - 15 psi	–	47000A	47001A	5493A	63754A
	30" - 30 psi	–	167218	47105A	5495A	5549A
SUCTION →	30" - 60 psi	–	57548A	46646A	5496A	12290A
	30" - 150 psi	–			5499A	12292A
	30" - 300 psi	–	–	58156A	15936A	–
1/8-27 LM	30"	146020A	47225A	–	–	–
1/8-27 CBM	30"	146021A	–	–	–	–
1/4-18 LM	30"	–	163712	171222A	171223A	5333A

* Dual scale dials are available, please contact Customer Service at (863) 534-1504
U-clamp kit for 1-1/2" P-500, Spec #166732

© 2006, by AMETEK, Inc. All rights reserved. PDF606 (160126) Specifications are subject to change without notice. Visit our Web sites for the most up-to-date information.

AMETEK®

ISO 9001:2000 CERTIFIED

For Gauges/Thermometers:
U.S. GAUGE
820 Pennsylvania Blvd.
Feasterville, PA 19053 U.S.A.
Tel: (215) 355-6900
Fax: (215) 354-1802
www.ametekusg.com
Customer Service Tel: (863) 534-1504
Customer Service Fax: (863) 533-7465

For Electronic Products:
PMT PRODUCTS
820 Pennsylvania Blvd.
Feasterville, PA 19053 U.S.A.
Tel: (215) 355-6900
Fax: (215) 354-1800
www.ametekusg.com

For Diaphragm Seals:
M&G PRODUCTS
8600 Somerset Drive
Largo, FL 33773 U.S.A.
Tel: (727) 536-7831
Fax: (727) 539-6882
www.ametek.com/tci

CLA-VAL™

— MODEL — **55L**

Pressure Relief Valve

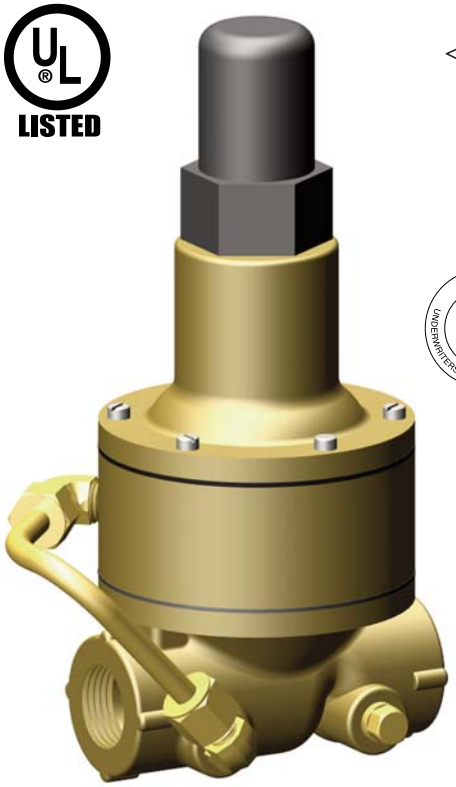

- **UL Listed**
- **Factory Mutual Approved**
- **Direct Acting - Precise Pressure Control**
- **Positive Dependable Opening**
- **Drip Tight Closure**
- **No Packing Glands or Stuffing Boxes**
- **Sensitive to Small Pressure Variations**

The Cla-Val Model 55L **(UL Listed FM approved)** Pressure Relief Valve is a direct-acting, spring loaded, diaphragm type relief valve. The valve may be installed in any position and will open and close within very close pressure limits.

The Model 55L is normally held closed by the force of the compression spring above the diaphragm. When the controlling pressure applied under the diaphragm exceeds the spring setting, the disc is lifted off its seat, permitting flow through the control. When control pressure drops below the spring setting, the spring forces the control back to its normally closed position. The controlling pressure is applied to the chamber beneath the diaphragm through an external tube on the 55L.

Pressure adjustment is simply a matter of turning the adjusting screw to vary the spring load on the diaphragm. The 55L is available in three pressure ranges; 0 to 75 psi, 20 to 175 psi, 100 to 300 psi. To prevent tampering, the adjustment cap can be wire sealed by using the lock wire holes provided in the cap and cover.

Note: Also Available in Seawater Service Material

Typical Applications

Fire Protection System Service
Using the **Model 55L** in a fire protection system or other closed type system, prevents pressure build-up whenever line pressure exceeds the setting of the spring. The valve will relieve excess pressure to atmosphere preventing damage to the distribution network.

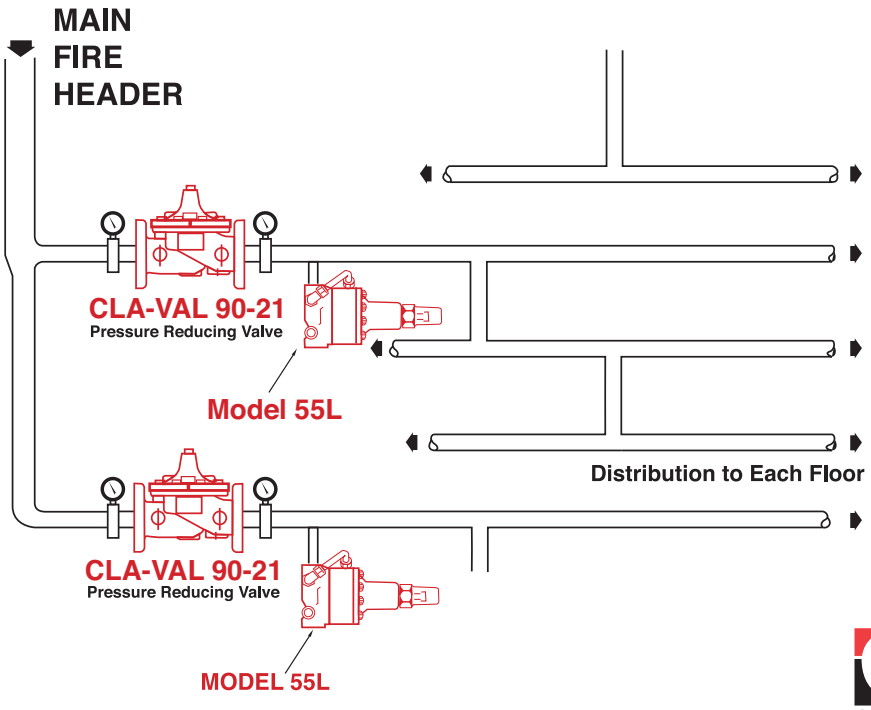

CLA-VAL™

Specifications

Size	1/2" & 3/4" Threaded
Temperature Range	Water, Air: to 180°F Max.
Materials	
Body & Cover:	Cast Bronze ASTM B62
	Stainless Steel ASTM A743-CF-16Fa
Trim:	Brass & Stainless Steel 303
Rubber:	Buna-N® Synthetic Rubber

UL Listed 55L Range psi	Approximate Increase for Each Clockwise Turn of Adjusting Screw
20 to 175	28.0 psi

FM Approved 55L Range psi	Approximate Increase for Each Clockwise Turn of Adjusting Screw
0 to 75	8.5 psi
20 to 200	28.0 psi
100 to 300	18.0 psi

Pressure Ratings	Cast Bronze 400 psi Max. Stainless Steel 400 psi Max.
Other Materials	Available on special order
Adjustment Ranges	0 to 75 psi 20 to 200 psi 100 to 300 psi

Flow Loss Chart (Full Open Valve)

Valve Size	C_V Factor	Flow of Water - Gallons Per Minute				
		5	10	16	20	30
1/2"	6	0.7	2.7	6	11	--
3/4"	8.5	0.3	1.4	3.1	5.5	12.2

When Ordering, Please Specify

1. Catalog No. 55L
2. Valve Size
3. Adjustment Range Desired
4. Optional Materials

55L Basic Valve Dimensions (In Inches)

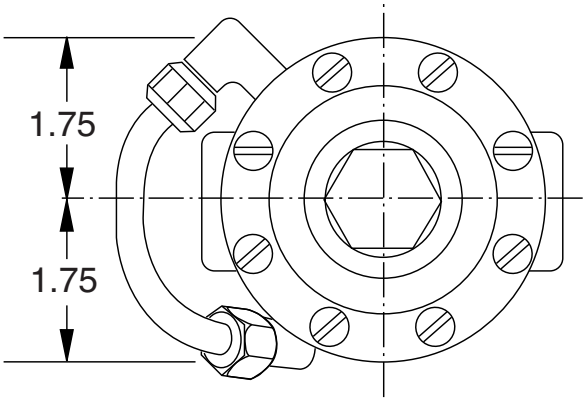

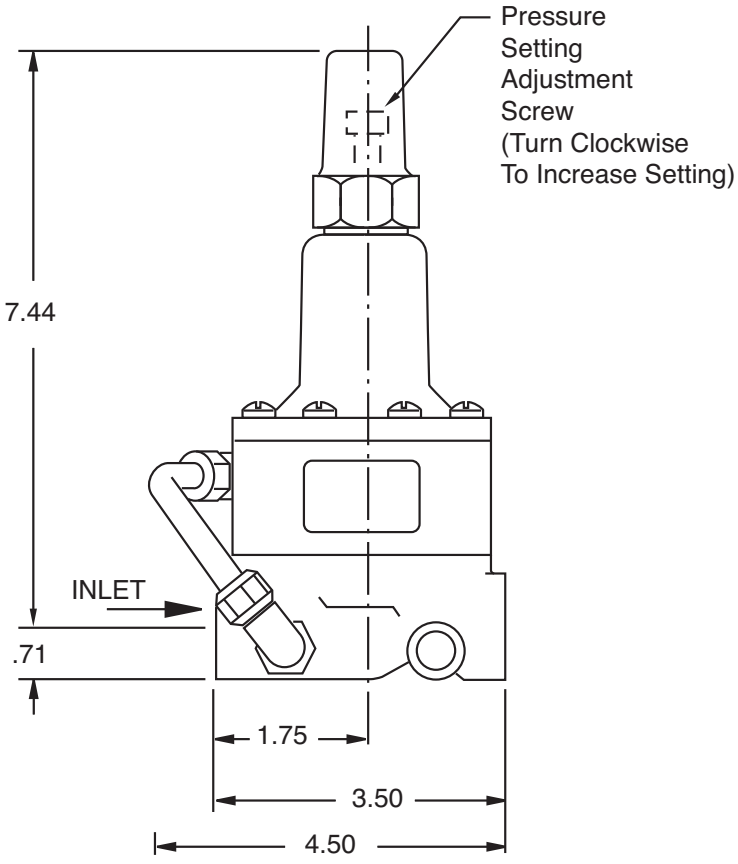

0 to 75 and 20 to175 psi design

CLA-VAL

PO Box 1325 Newport Beach CA 92659-0325

800-942-6326 • Fax: 949-548-5441 • Web Site: cla-val.com • E-mail: claval@cla-val.com

CLA-VAL CANADA
4687 Christie Drive
Beamsville, Ontario
Canada L0R 1B4
Phone: 905-563-4963
Fax: 905-563-4040
E-mail sales@cla-val.ca

CLA-VAL EUROPE
Chemin des Mésanges 1
CH-1032 Romanel/
Lausanne, Switzerland
Phone: 41-21-643-15-55
Fax: 41-21-643-15-50
E-mail: cla-val@cla-val.ch

CLA-VAL UK
Dainton House, Goods Station Road
Tunbridge Wells
Kent TN1 2 DH England
Phone: 44-1892-514-400
Fax: 44-1892-543-423
E-mail: info@cla-val.co.uk

CLA-VAL FRANCE
Porte du Grand Lyon 1
ZAC du Champ du Périer
France - 01700 Neyron
Phone: 33-4-72-25-92-93
Fax: 33-4-72-25-04-17
E-mail: cla-val@cla-val.fr

CLA-VAL PACIFIC
306 Port Hills Road (Level Two)
Woolston, Christchurh, 8042
NewZealand
Phone: 64-39644860
Fax: 64-39644786
E-mail: gnuthall@cla-val.com

E-55L (R-9/2011)

©COPYRIGHT CLA-VAL 2011 Printed in USA Specifications subject to change without notice.

Controller Data:

TORNATECH

Project: _____

Customer: _____

Engineer: _____

Pump Manufacturer: _____

Technical Data
Submittal Document

GPx Series

Full Service
Electric Fire Pump Controller

Contents:

Data Sheets
Dimensional Data
Wiring Schematics
Field Connections

Note: The drawings included in this package are for controllers covered under our standard offering. Actual AS BUILT drawings may differ from what is shown in this package.

c UL us FM APPROVED N.Y.C. APPROVED CE

August 2025

Select starting method

☑ **Model GPA**
Across the line

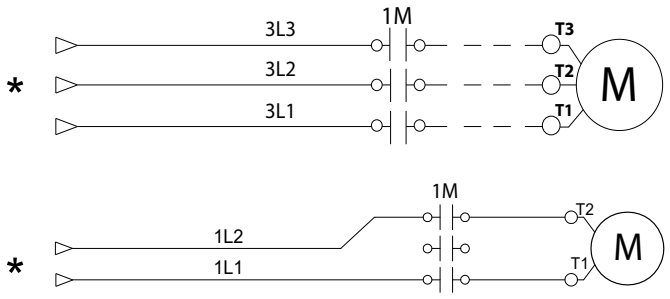

☐ **Model GPP**
Partwinding

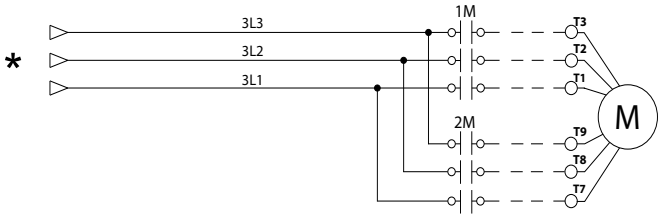

☐ **Model GPS**
Soft Start Soft Stop

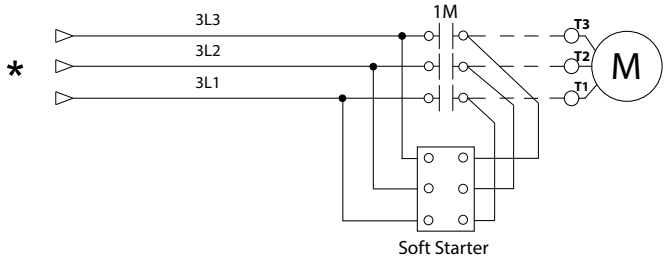

☐ **Model GPR**
Autotransformer

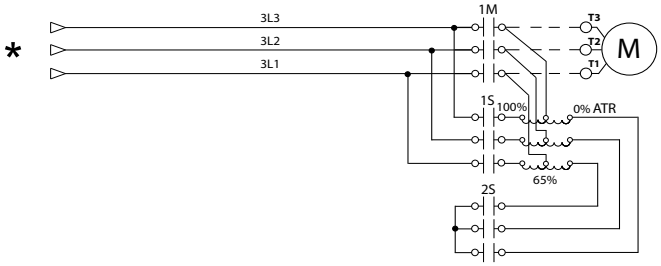

☐ **Model GPY**
Wye-Delta Open

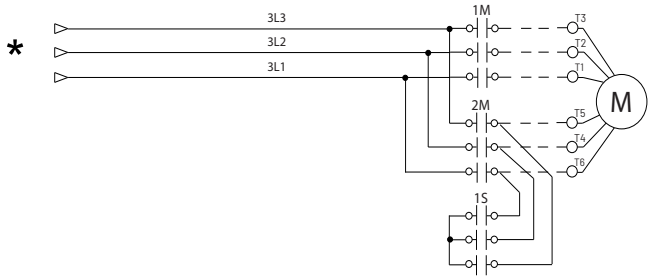

☐ **Model GPW**
Wye-Delta Closed

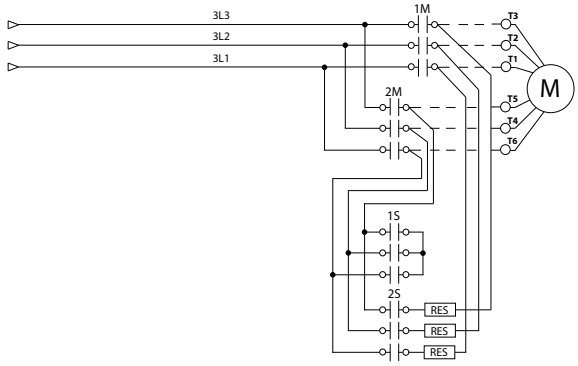

*From normal incoming power through Disconnecting Means (IS/CB)
*Please see Disconnecting Means details on page 4

This is a Marketing document. Please consult factory for more information.
Manufacturer reserves the right to modify this information without notice

Select voltage and power rating

Voltage	Select Voltage	HP	Select HP
120V/1ph/60Hz [1]	☐	5	☐
200V/2ph/60Hz [1]	☐	7.5	☐
208V/2ph/60Hz [1]	☐	10	☐
220V/2ph/60Hz [1]	☐	15	☐
230V/2ph/60Hz [1]	☐	20	☐
240V/2ph/60Hz [1]	☐	25	☐
200V/3ph/50-60Hz [3]	☐	30	☑
208V/3ph/50-60Hz [3]	☑	40	☐
220V/3ph/50-60Hz [4]	☐	50	☐
230V/3ph/50-60Hz [4]	☐	60	☐
240V/3ph/50-60Hz [4]	☐	75	☐
380V/3ph/50-60Hz [5]	☐	100	☐
400V/3ph/50-60Hz [5]	☐	125	☐
415V/3ph/50-60Hz [5]	☐	150	☐
440V/3ph/50-60Hz [6]	☐	200	☐
460V/3ph/50-60Hz [6]	☐	250	☐
480V/3ph/50-60Hz [6]	☐	300	☐
575V/3ph/60Hz [6]	☐	350	☐
600V/3ph/60Hz [6]	☐	400	☐
		450	☐
		500	☐

Voltage	Select Voltage	kW [2]	Select kW
380V/3ph/50-60Hz	☐	4	☐
400V/3ph/50-60Hz	☐	5.5	☐
415V/3ph/50-60Hz	☐	7.5	☐
		11	☐
		15	☐
		18.5	☐
		22	☐
		30	☐
		37	☐
		45	☐
		55	☐
		75	☐
		90	☐
		110	☐
		132	☐
		160	☐
		200	☐
		250	☐
		315	☐
		355	☐
		400	☐
		450	☐

Notes: [1] Only available for Model GPA. Maximum power rating is 30HP.
[2] kW power ratings only available for Models GPA, GPS and GPY.
[3] Maximum power rating is 200HP.
[4] Maximum power rating is 250HP.
[5] Maximum power rating is 450HP.
[6] Maximum power rating is 500HP.

This is a Marketing document. Please consult factory for more information.
Manufacturer reserves the right to modify this information without notice

Standard, Listings, Approvals and Certifications	**Built to NFPA 20**		
	Underwriters Laboratory (UL)	UL218 - Fire Pump Controllers	
	FM Global	Class 1321/1323	
	New York City	Accepted for use in the City of New York by the Department of Buildings	
	CE Mark	Various EN, IEC & CEE directives and standards	
	Built in Canada or U.A.E	Built in Europe	
	☐ CE Mark Option	Supplied as Standard	
Enclosure	**Protection Rating**		
	Built in Canada or U.A.E	Built in Europe	
	☑ Standard: NEMA 2	☐ Standard: IP55	
	Optional		
	☐ NEMA 12	☐ NEMA 4X-304 sst painted	☐ IP54
	☐ NEMA 3	☐ NEMA 4X-304 sst brushed finish	☐ IP55
	☐ NEMA 3R	☐ NEMA 4X-316 sst painted	☐ IP65
	☐ NEMA 4	☐ NEMA 4X-316 sst brushed finish	☐ IP66
	Accessories • Bottom entry gland plate • Lifting Lugs • Keylock handle	**Paint Specifications** • Red RAL3002 • Powder coating • Glossy textured finish	

Short Circuit Withstand Ratings

HP	200V to 208V 50/60Hz/3ph			220V to 240V 50/60Hz/3ph			380V to 415V 50/60Hz/3ph			440V to 480V 50/60Hz/3ph			575V to 600V 60Hz/3ph		
	Standard	Inter-mediate Option D13 ☐	High Option D13B ☐	Standard	Inter-mediate Option D13 ☐	High Option D13B ☐	Standard	Inter-mediate Option D13 ☐	High Option D13B ☐	Standard	Inter-mediate Option D13 ☐	High Option D13B ☐	Standard	Inter-mediate Option D13 ☐	High Option D13B ☐
≤150	100kA	150kA	200kA	100kA	150kA	200kA	100kA	150kA	200kA	100kA	150kA	200kA	50kA	100kA	-
200	50kA	100kA	-												
250	-	-	-	50kA	100kA	-									
300	-	-	-	-	-	-			-						
350	-	-	-	-	-	-			-						
400	-	-	-	-	-	-	50kA	100kA	-						
450	-	-	-	-	-	-	30kA		-	50kA	100kA	-			
500	-	-	-	-	-	-			-			-			

Ambient Temperature Rating	**Standard**: ☐ 4°C to 40°C / 39°F to 104°F **Optional**: ☑ 4°C to 55°C / 39°F to 131°F Controllers built in Dubai, UAE (Tornatech FZE) are supplied standard with 55°C rating.
Surge Suppression	Surge arrestor rated to suppress surges above line voltage
Disconnecting Means	• Isolating switch and circuit breaker assembly: - Door interlocked in the ON position - Isolating switch rated not less than 115% of motor full load current - Circuit breaker continuous rating not less than 115% of motor full load current - Overcurrent sensing non-thermal type, magnetic only - Instantaneous trip setting of not more than 20 times the motor full load current • Common flange mounted operating handle
Service Entrance Rating	Suitable as service entrance equipment (not applicable for installations in Canada).
Emergency Start Handle	• Flange mounted • Pull and latch activation • Integrated limit switch • Across the line start (direct on line)
Locked Rotor Protector	• Operate shunt trip to open circuit breaker • Factory set at 600% of motor full load current • Trip between 8 and 20 seconds
Electrical Readings	• Voltage phase to phase (normal power) • Amperage of each phase when motor is running
Pressure Readings	• Continuous system pressure display • Cut-in and Cut-out pressure settings
Pressure and Event recorder	• Pressure readings with date stamp • Event recording with date stamp • Under regular maintained operation, events are stored in memory for the life of the controller. • Data viewable on operator interface display screen • Downloadable by USB port to external memory device or wireless connection to manufacturers App (mobile device).
Pressure Sensing	• Pressure transducer and run test solenoid valve assembly for fresh water application • Pressure sensing line connection 1/2” Female NPT • Drain connection 3/8” • Rated for 0-500PSI working pressure (standard display at 0-300PSI) • Externally mounted with protective cover

This is a Marketing document. Please consult factory for more information.
Manufacturer reserves the right to modify this information without notice

Audible Alarm	Alarm buzzer - 85dB at 3 meters
Visual Indications	• Power available • Motor run • Periodic test • Manual start • Deluge valve start • Remote automatic start • Remote manual start • Emergency start • Pump on demand/Automatic start • Pump room temperature (ºF or ºC) • Lockout
Visual & Audible Alarms	Visual • Control voltage not healthy • Invalid cut-in • Lock rotor current • Loss of power • Low ambient temperature • Low water level • Motor trouble • Phase reversal (normal power) • Overcurrent • Overvoltage • Phase loss L1 • Phase loss L2 • Phase loss L3 • Phase unbalanced • Pressure transducer fault detected • Pump on demand • Pump room alarm • Service required • Undercurrent • Undervoltage • Check weekly test solenoid • Weekly test cut-in reached Visual and audible • Fail to start
Remote Alarm Contacts	DPDT-8A-250V.AC • Power available • Phase reversal • Motor run • Common pump room alarm (field re-assignable)** • Overvoltage • Undervoltage • Phase unbalance • Low pump room temperature • High Pump room temperature • Common motor trouble (field re-assignable)** • Overcurrent • Fail to start • Undercurrent • Ground fault • Free (field programmable)**

**Tornatech reserves the right to use any of these three alarm points for special specific application requirements.

This is a Marketing document. Please consult factory for more information.
Manufacturer reserves the right to modify this information without notice

ViZiTouch V2.1 Operator Interface	• Embedded microcomputer with software PLC logic • 7.0” color touch screen (HMI technology) • Upgradable software • Multi-language		
Communication Protocol Capability	• Protocol: Modbus • Connection type: Shielded female connector RJ45 • Frame Format: TCP/IP • Addresses: See bulletin MOD-GPx		
Operation	**Automatic Start**	• Start on pressure drop • Remote start signal from automatic device • Deluge valve start	
	Manual Start	• Start pushbutton • Run test pushbutton • Remote start from manual device	
	Stopping	• Manual with Stop pushbutton • Automatic after expiration of minimum run timer ***	
	Timers	Field Adjustable & Visual Countdown	• Minimum run timer ***(off delay) • Sequential start timer (on delay) • Periodic test timer
	Actuation	Visual Indication	• Pressure • Non-pressure
	Mode		• Automatic • Non-automatic

***Can only be used if approved by the AHJ

This is a Marketing document. Please consult factory for more information.
Manufacturer reserves the right to modify this information without notice

☐	A4	Flow switch provision
☐	A8	Foam pump application w/o pressure transducer and run test solenoid valve.
☐	A9	Low zone pump control function
☐	A10	Middle zone pump control function
☐	A11	High zone pump control function
☐	A13	Non-pressure actuated controller w/o pressure transducer and run test solenoid valve
☐	A16	Lockout/interlock circuit from equipment installed inside the pump room
☐	B11	Built in alarm panel (120V.AC supervisory power) providing indication for: • Audible alarm & silence pushbutton for motor run, phase reversal, loss of phase. • Pilot lights for loss of phase & supervisory power available
☐	B11B	Built in alarm panel same as B11 but 220-240VAC supervisory power
☐	B19A	High motor temperature c/w thermoster relay and alarm contacts (DPDT)
☐	B19B	High motor temperature c/w PT100 relay and alarm contacts (DPDT)
☐	B21	Ground fault alarm detection c/w visual indication and alarm contact (DPDT)
☐	B25	Digital flow test feature complete with access to Pump Curve menu, display of flow rate on main screen and 25ft cable (Option ONLY suitable for connection with Tornatech digital flow meter)
☐	C1	Extra motor run alarm contact (DPDT)
☐	C4	Periodic test alarm contact (DPDT)
☐	C6	Low discharge pressure alarm contact (DPDT)
☐	C7	Low pump room temperature alarm contact (DPDT)
☐	C10	Low water reservoir level alarm contact (DPDT)
☐	C11	High electric motor temperature alarm contact (DPDT)
☐	C12	High electric motor vibration c/w visual indication and alarm contact (DPDT)
☐	C14	Pump on demand / automatic start alarm contact (DPDT)
☐	C15	Pump fail to start alarm contact (DPDT)
☐	C16	Control voltage healthy alarm contact (DPDT)
☐	C17	Flow meter valve loop open c/w visual indication and alarm contact (DPDT)
☐	C18	High water reservoir level c/w visual indication and alarm contact (DPDT)
☐	C19	Emergency start alarm contact (DPDT)
☐	C20	Manual start alarm contact (DPDT)
☐	C21	Deluge valve start alarm contact (DPDT)
☐	C22	Remote automatic start alarm contact (DPDT)
☐	C23	Remote manual start alarm contact (DPDT)
☐	C24	High pump room temperature alarm contact (DPDT)
☐	C25	Second set of standard alarm contacts (DPDT) (Typical for city of Los Angeles and Denver)
☐	Cx	Additional visual and alarm contact (Specify function) (DPDT)
☐	D1	Low suction pressure transducer for fresh water rated at 0-500PSI with visual indication and alarm contact
☐	D1A	Low suction pressure transducer for sea water rated at 0-500PSI with visual indication and alarm contact
☐	D5	Pressure transducer and run test solenoid valve for fresh water rated for 0-500PSI (for factory calibration purposes only)
☐	D5D	Pressure transducer and run test solenoid valve for sea water rated for 0-500PSI
☐	D10	Omit mounting feet (when applicable)
☐	D14	Anti-condensation heater & thermostat
☐	D14A	Anti-condensation heater & humidistat
☐	D14B	Anti-condensation heater & thermostat & humidistat
☐	D15	Tropicalization
☐	D18	CE Mark with factory certificate
☐	D27	Motor heater connection (external single phase power source and heater on/off contact)
☐	D27A	Motor heater connection (internal single phase power source and heater on/off contact)
☐	D28	Customized drawing set

*For fire pump controller section only.
Note: Options chosen from this page are not electrically represented on the wiring schematics in this submittal package.

This is a Marketing document. Please consult factory for more information.
Manufacturer reserves the right to modify this information without notice

☐	D34A	Field programmable I/O board - 5 Input / 5 output
☐	D36	Redundant pressure transducer for fresh water rated for 0-500PSI
☐	D36A	Redundant pressure transducer for sea water rated for 0-500PSI
☐	D43	Seismic Certification compliant to CBC 2019, IBC 2018 rigid base/wall mounted only
☐	D44	Special Seismic Certification compliant to OSHPD rigid base/wall mounted only

☐	L01	Other language and English (bilingual)
☐	L02	French
☐	L03	Spanish
☐	L04	German
☐	L05	Italian
☐	L06	Polish
☐	L07	Romanian
☐	L08	Hungarian
☐	L09	Slovakian
☐	L10	Croatian
☐	L11	Czech
☐	L12	Portuguese
☐	L13	Dutch
☐	L15	Turkish
☐	L16	Swedish
☐	L21	Danish
☐	L25	Chinese
☐	L28	Finnish
☐	L29	Norwegian

Additional Options:

☐ _____

☐ _____

☐ _____

☐ _____

☐ _____

Note: Options chosen from this page are not electrically represented on the wiring schematics in this submittal package.

This is a Marketing document. Please consult factory for more information.
Manufacturer reserves the right to modify this information without notice

ViZiTouch V2.1 Operator Interface

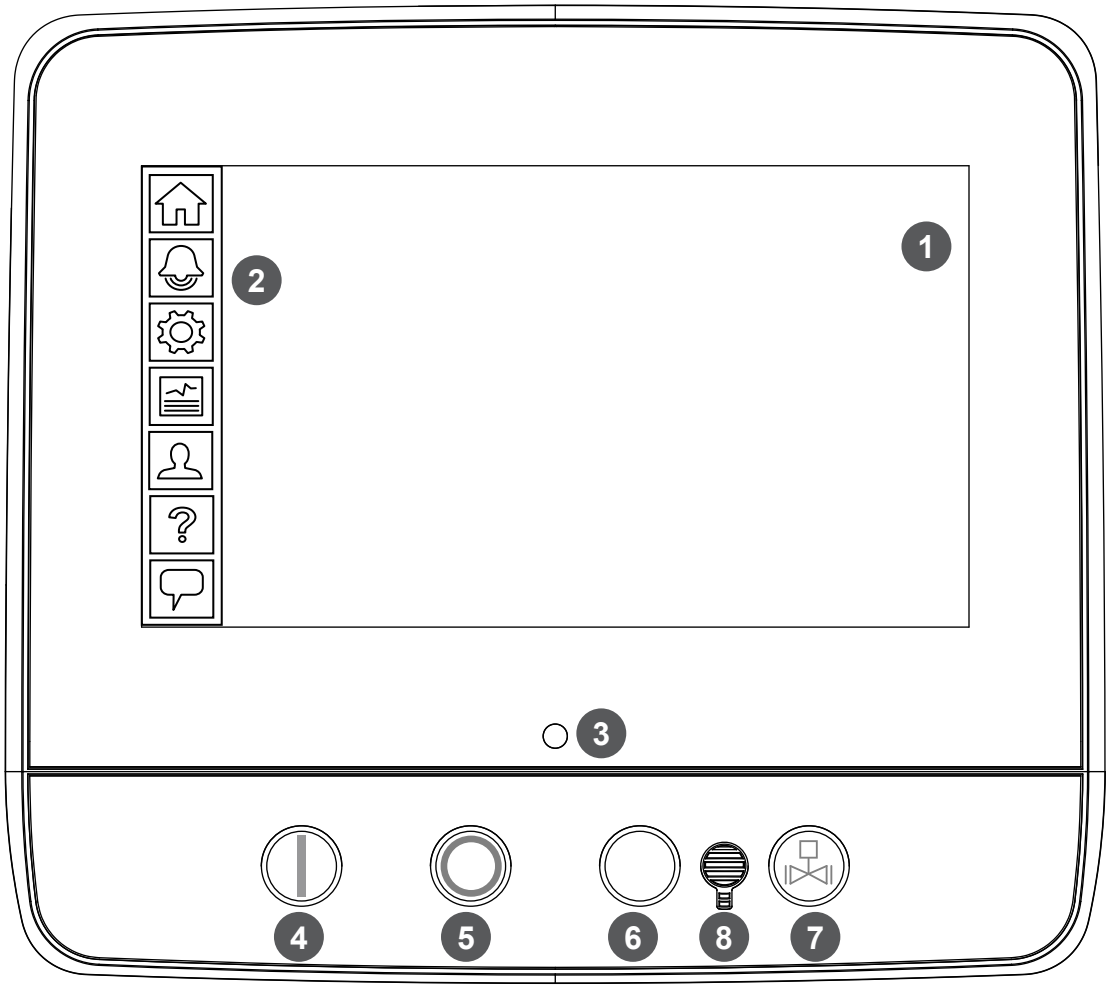

1 - Color touch screen
2 - Onscreen menu
- HOME page
- ALARM page
- CONFIGURATION page
- HISTORY page
- SERVICE page
- MANUAL page
- LANGUAGES page

3 - Power LED (3 colors)
4 - START button
5 - STOP button
6 - Not Used
7 - RUN TEST button
8 - Alarm buzzer

This is a Marketing document. Please consult factory for more information.
Manufacturer reserves the right to modify this information without notice

TORNATECH

© Tornatech, Inc. Not for construction. Subject to change without notice.

	BY	DD/MM/YY
DRAWN BY	MLC	04/10/24
FINAL APPROVAL	FC	07/11/24

ELECTRIC FIRE PUMP CONTROLLER

MODEL: GPA/GPP/GPY

BUILT TO THE LATEST EDITION OF THE NFPA20 & NFPA70

NYC Dpt of Building Approved

THIRD ANGLE PROJECTION

DRAWING NUMBER GPX-DI910/E

DWG REV. 0

SHEET 1 OF 1

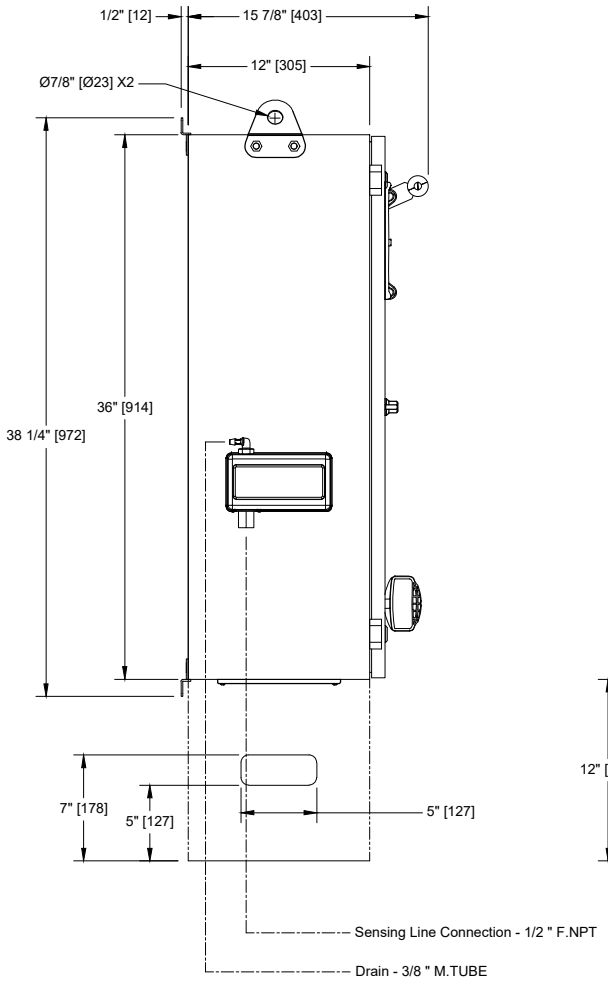

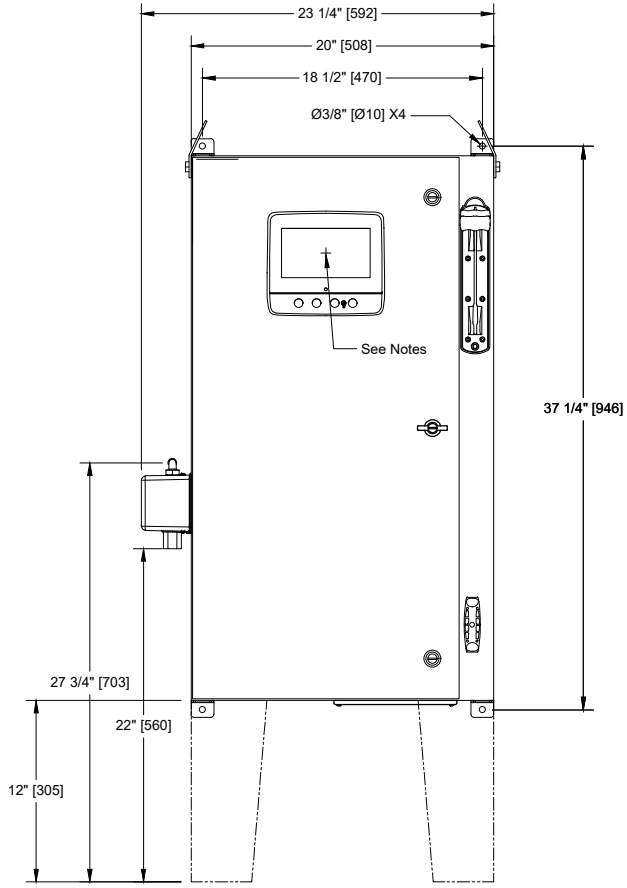

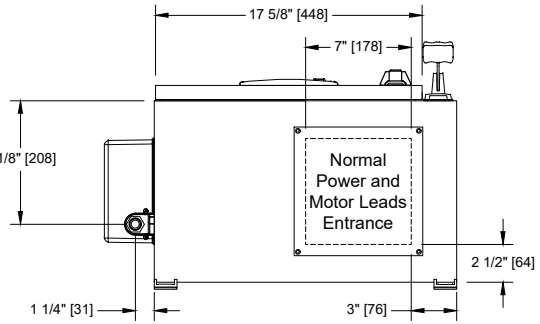

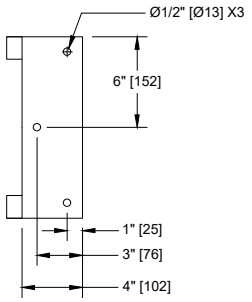

Voltage / Power Table		
Voltage	Min HP	Max HP
208	5	30
220 - 240	5	30
380 - 400 - 415	5	60
440 - 480	5	60
600	5	75

Notes:

- Standard: NEMA 2
- Standard paint : textured red RAL 3002.
- All dimensions are in inches [millimeters].
- Center of screen: 29-5/8" [751] from bottom (no feet).
- Bottom conduit entrance through removable gland plate recommended.
- Use watertight conduit and connector only.
- Protect equipment against drilling chips.
- Door swing equal to door width.

Copyright © 2025 Tornatech Inc. All right reserved. This drawing and the information contained or depicted herein are the sole property of Tornatech Inc. Copies are communicated to the recipient in strict confidence and may not be retransmitted, published, reproduced, copied or used in any manner, including as the basis for the manufacture or sale of any products, without the express prior written consent of Tornatech Inc.

TORNATECH

© Tornatech, Inc. Not for construction.
Subject to change without notice.

	BY	DD/MM/YY
DRAWN BY	ACD	28/02/23
FINAL APPROVAL	FC	28/02/23

ELECTRIC FIRE PUMP CONTROLLER
FULL VOLTAGE / ACROSS THE LINE

MODEL:GPA

BUILT TO THE LATEST EDITION OF THE NFPA20 & NFPA70

NYC Dpt of Building Approved

DRAWING NUMBER
GPA-WS800/E
DWG REV. 0
SHEET 1 OF 2

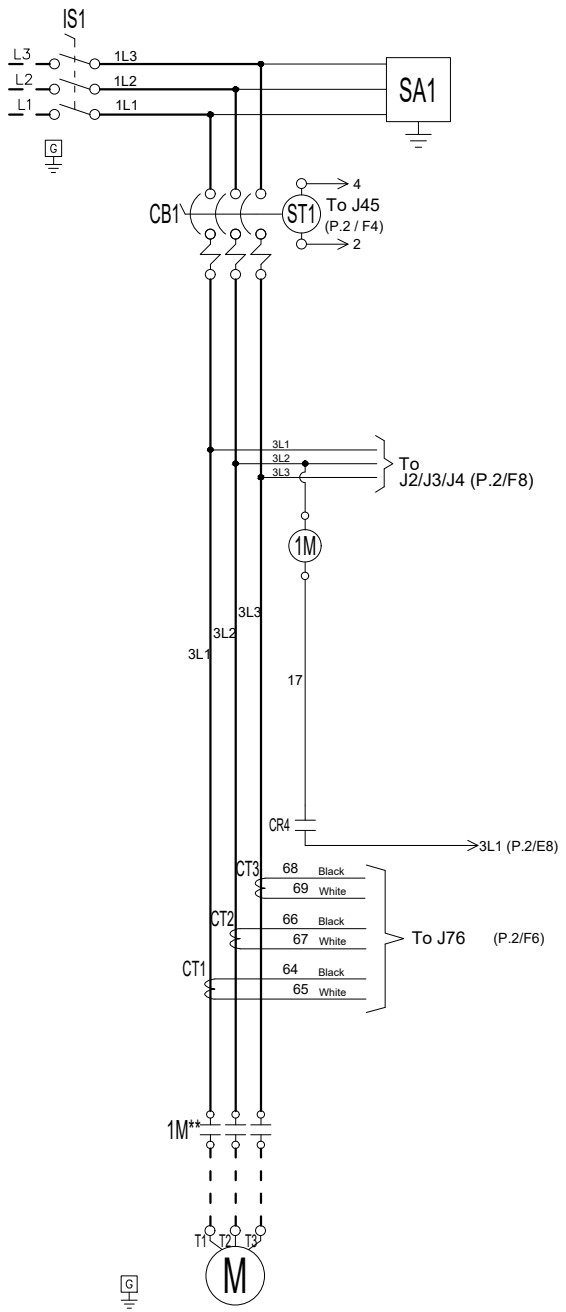

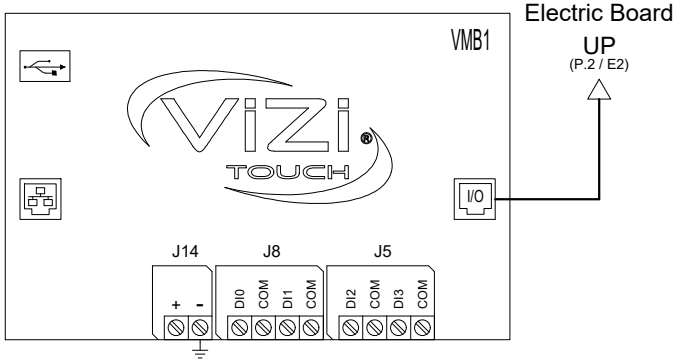

Legend	
1M	Contactor
AB	Alarm Bell
CB	Circuit Breaker
CR	Control Relay
CT	Current Transformer
EB	Electric I/O Board
IS	Isolating Switch
J	Jumper
LS	Limit Switch
PT	Pressure Transducer
SA	Surge Arrester
ST	Shunt Trip
SV	Solenoid Valve
VMB	Main Board
XTR	Transformer

Copyright © 2025 Tornatech Inc. All right reserved. This drawing and the information contained or depicted herein are the sole property of Tornatech Inc. Copies are communicated to the recipient in strict confidence and may not be retransmitted, published, reproduced, copied or used in any manner, including as the basis for the manufacture or sale of any products, without the express prior written consent of Tornatech Inc.

TORNATECH

© Tornatech, Inc. Not for construction.
Subject to change without notice.

	BY	DD/MM/YY
DRAWN BY	ACD	28/02/23
FINAL APPROVAL	FC	28/02/23

ELECTRIC FIRE PUMP CONTROLLER
FULL VOLTAGE / ACROSS THE LINE

MODEL:GPA

BUILT TO THE LATEST EDITION OF THE NFPA20 & NFPA70

NYC Dpt of Building Approved

DRAWING NUMBER GPA-WS800/E
DWG REV. 0
SHEET 2 OF 2

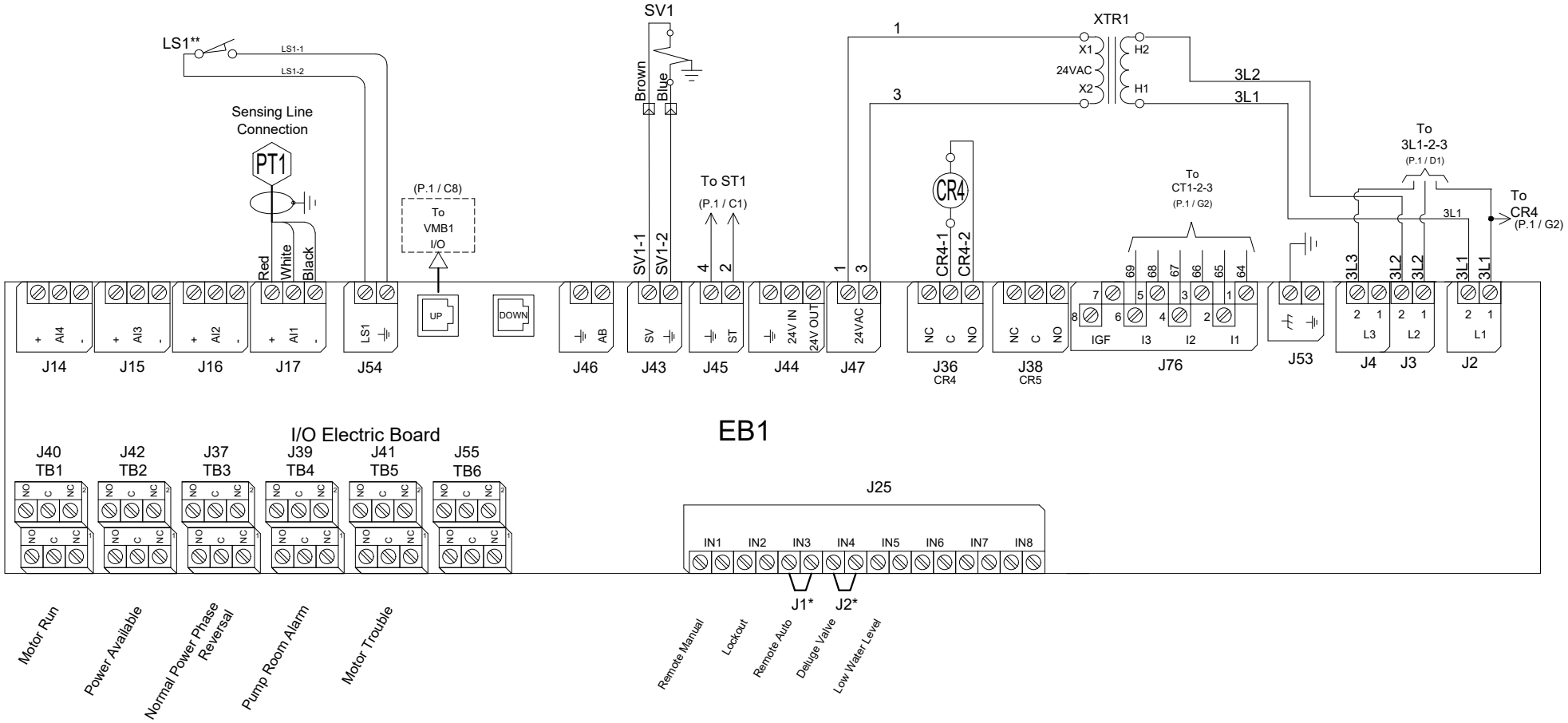

* Remove jumper to use this feature
** Contact closes when emergency start is in "ON" position

Copyright © 2025 Tornatech Inc. All right reserved. This drawing and the information contained or depicted herein are the sole property of Tornatech Inc. Copies are communicated to the recipient in strict confidence and may not be retransmitted, published, reproduced, copied or used in any manner, including as the basis for the manufacture or sale of any products, without the express prior written consent of Tornatech Inc.

TORNATECH

© Tornatech, Inc. Not for construction. Subject to change without notice.

		BY	DD/MM/YY
DRAWN BY		MLC	04/10/24
FINAL APPROVAL		FC	07/11/24

ELECTRIC FIRE PUMP CONTROLLER

MODEL:GPX

BUILT TO THE LATEST EDITION OF THE NFPA20 & NFPA70

NYC Dpt of Building Approved

DRAWING NUMBER GPX-TD907/E

DWG REV. 0

SHEET 1 OF 1

COPPER CONDUCTORS for Isolating Switch (IS1).

Field Wiring According to Bending Space (AWG or MCM). Terminals L1 - L2 - L3

Bending Space	5 " (127 mm)							8 " (203 mm)		
HP / Voltage	5	7.5	10	15	20	25	30	40	50	60
208	1x (10 to 1/0)	1x (8 to 1/0)	1x (8 to 1/0)	1x (6 to 1/0)	1x (4 to 1/0)	1x (3 to 1/0)	1x (2 to 1/0)	1x (1/0 to 3/0)	1x (3/0 to 250)	1x (4/0 to 250)
220 to 240	1x (10 to 1/0)	1x (10 to 1/0)	1x (8 to 1/0)	1x (6 to 1/0)	1x (4 to 1/0)	1x (4 to 1/0)	1x (3 to 1/0)	1x (1 to 3/0)	1x (2/0 to 3/0)	1x (3/0 to 250)
380 to 416	1x (10 to 1/0)	1x (10 to 1/0)	1x (10 to 1/0)	1x (8 to 1/0)	1x (8 to 1/0)	1x (6 to 1/0)	1x (6 to 1/0)	1x (4 to 1/0)	1x (3 to 1/0)	1x (1 to 1/0)
440 to 480	1x (10 to 1/0)	1x (10 to 1/0)	1x (10 to 1/0)	1x (10 to 1/0)	1x (8 to 1/0)	1x (8 to 1/0)	1x (6 to 1/0)	1x (6 to 1/0)	1x (4 to 1/0)	1x (3 to 1/0)
600	1x (10 to 1/0)	1x (10 to 1/0)	1x (10 to 1/0)	1x (10 to 1/0)	1x (10 to 1/0)	1x (8 to 1/0)	1x (8 to 1/0)	1x (6 to 1/0)	1x (6 to 1/0)	1x (4 to 1/0)

Bending Space	12 " (305 mm)				16 " (406 mm)***						
HP / Voltage	75	100	125	150	200	250	300	350	400	450	500
208	2x (1/0 to 500)	2x (2/0 to 500)	2x (4/0 to 500)	2x (250 to 500)	3x (4/0 to 500)	--------	--------	--------	--------	--------	--------
220 to 240	1x (250)	2x (2/0 to 500)	2x (3/0 to 500)	2x (4/0 to 500)	2x (350 to 500)	3x (250 to 500)	--------	--------	--------	--------	--------
380 to 416	1x (1/0 to 250)	1x (3/0 to 250)	1x (250)	1x (300 to 500)	1x (500)	2x (4/0 to 500)	2x (300 to 500)	3x (4/0 to 500)	3x (250 to 500)	4x (3/0 to 500)	--------
440 to 480	1x (1 to 250)	1x (2/0 to 250)	1x (3/0 to 250)	1x (4/0 to 250)	1x (350 to 500)	1x (500)	2x (4/0 to 500)	2x (300 to 500)	3x (3/0 to 500)	3x (4/0 to 500)	3x (250 to 500)
600	1x (3 to 1/0)	1x (1 to 250)	1x (2/0 to 250)	1x (3/0 to 250)	1x (250 to 500)	1x (350 to 500)	1x (500)	2x (4/0 to 500)	2x (250 to 500)	2x (300 to 500)	2x (350 to 500)
Bending Space	5 " (127 mm)	8 " (203 mm)			12 " (305 mm)						

ALUMINUM CONDUCTORS for Isolating Switch (IS1).***

Field Wiring According to Bending Space (AWG or MCM). Terminals L1 - L2 - L3

Bending Space	5 " (127 mm)							8 " (203 mm)		10 " (254 mm)
HP / Voltage	5	7.5	10	15	20	25	30	40	50	60
208	1x (10 to 1/0)	1x (6 to 1/0)	1x (6 to 1/0)	1x (4 to 1/0)	1x (3 to 1/0)	1x (1 to 1/0)	1x (1/0)	1x (3/0)	1x (4/0 to 250)	1x (300) ** or 1x (250) 90°C *
220 to 240	1x (10 to 1/0)	1x (8 to 1/0)	1x (6 to 1/0)	1x (4 to 1/0)	1x (3 to 1/0)	1x (2 to 1/0)	1x (1 to 1/0)	1x (2/0 to 3/0)	1x (3/0) 90°C *	1x (250)
380 to 416	1x (10 to 1/0)	1x (10 to 1/0)	1x (10 to 1/0)	1x (6 to 1/0)	1x (6 to 1/0)	1x (4 to 1/0)	1x (4 to 1/0)	1x (2 to 1/0)	1x (1 to 1/0)	1x (1/0)
440 to 480	1x (10 to 1/0)	1x (10 to 1/0)	1x (10 to 1/0)	1x (8 to 1/0)	1x (6 to 1/0)	1x (6 to 1/0)	1x (6 to 1/0)	1x (4 to 1/0)	1x (2 to 1/0)	1x (1 to 1/0)
600	1x (10 to 1/0)	1x (10 to 1/0)	1x (10 to 1/0)	1x (10 to 1/0)	1x (8 to 1/0)	1x (6 to 1/0)	1x (6 to 1/0)	1x (4 to 1/0)	1x (4 to 1/0)	1x (2 to 1/0)

Bending Space	12 " (305 mm)				16 " (406 mm)***						
HP / Voltage	75	100	125	150	200	250	300	350	400	450	500
208	2x (2/0 to 500)	2x (4/0 to 500)	2x (300 to 500)	2x (350 to 500)	3x (300 to 500)	--------	--------	--------	--------	--------	--------
220 to 240	1x (350) ** N/A	2x (3/0 to 500)	2x (250 to 500)	2x (300 to 500)	2x (500)	3x (400 to 500)	--------	--------	--------	--------	--------
380 to 416	1x (3/0 to 250)	1x (250)	Consult Factory	1x (500)	Consult Factory	2x (300 to 500)	2x (500)	3x (300 to 500)	3x (350 to 500)	3x (400 to 500)	--------
440 to 480	1x (1/0 to 250)	1x (3/0 to 250)	1x (250)	1x (250) 90°C *	1x (500)	Consult Factory	2x (300 to 500)	2x (400 to 500)	3x (250 to 500)	3x (300 to 500)	3x (350 to 500)
600	1x (1 to 1/0)	1x (2/0 to 250)	1x (4/0 to 250)	1x (4/0 to 250)	1x (350 to 500)	1x (500)	Consult Factory	2x (300 to 500)	2x (350 to 500)	2x (400 to 500)	2x (500)
Bending Space	5 " (127 mm)	8 " (203 mm)			12 " (305 mm)						

*For standard enclosure, use 90°C aluminium wire. Consult Factory for Use of Conductors Rated Lower than 90°C.

** Consult Factory

*** Aluminum is not permitted in Canada.

Power Terminals

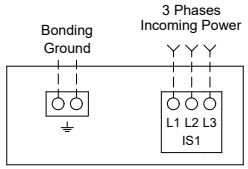

***Only for 16"(406 mm) bending space

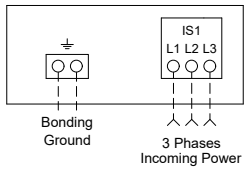

Notes:

1 - For proper wire sizing, refer to NFPA70 and NEC (USA) or CEC (Canada) or local code.

2 - Controller suitable for use as service equipment in USA.

3 - Controller use as service equipment prohibited in Canada.

4 - For more accurate motor connections refer to motor manufacturer or motor nameplate.

5 - Controller is phase sensitive. Incoming lines must be connected in ABC sequence.

Drawing for information only.
Manufacturer reserves the right to modify this drawing without notice.
Contact manufacturer for "As Built" drawing.

Copyright © 2025 Tornatech Inc. All right reserved. This drawing and the information contained or depicted herein are the sole property of Tornatech Inc. Copies are communicated to the recipient in strict confidence and may not be retransmitted, published, reproduced, copied or used in any manner, including as the basis for the manufacture or sale of any products, without the express prior written consent of Tornatech Inc.

TORNATECH

© Tornatech, Inc. Not for construction. Subject to change without notice.

		BY	DD/MM/YY
DRAWN BY		MLC	04/10/24
FINAL APPROVAL		FC	07/11/24

ELECTRIC FIRE PUMP CONTROLLER

MODEL: GPA

BUILT TO THE LATEST EDITION OF THE NFPA20 & NFPA70

NYC Dpt of Building Approved

DRAWING NUMBER GPX-TD901/E

DWG REV. 0

SHEET 1 OF 1

COPPER CONDUCTORS for Motor Connection (1M).

Field Wiring According to Bending Space (AWG or MCM). Terminals T1 - T2 - T3

HP / Voltage	5	7.5	10	15	20	25	30	40	50	60
208	1x (10 to 2)	1x (8 to 2)	1x (8 to 2)	1x (6 to 2)	1x (4 to 2)	1x (3 to 2/0)	1x (2 to 2/0)	1x (1/0 to 3/0)	1x (3/0)	1x (4/0 to 300)
220 to 240	1x (10 to 2)	1x (10 to 2)	1x (8 to 2)	1x (6 to 2)	1x (4 to 2)	1x (4 to 2/0)	1x (3 to 2/0)	1x (1 to 3/0)	1x (2/0 to 3/0)	1x (3/0)
380 to 416	1x (10 to 4)	1x (10 to 4)	1x (10 to 4)	1x (8 to 4)	1x (8 to 4)	1x (6 to 4)	1x (6 to 4)	1x (4 to 2)	1x (3 to 2)	1x (1 to 2/0)
440 to 480	1x (10 to 4)	1x (10 to 4)	1x (10 to 4)	1x (10 to 4)	1x (8 to 4)	1x (8 to 4)	1x (6 to 4)	1x (6 to 4)	1x (4 to 2)	1x (3 to 2/0)
600	1x (10 to 4)	1x (10 to 4)	1x (10 to 4)	1x (10 to 4)	1x (10 to 4)	1x (8 to 4)	1x (8 to 4)	1x (6 to 4)	1x (6 to 2)	1x (4 to 2/0)

HP / Voltage	75	100	125	150	200	250	300	350	400	450	500
208	1x (300)	2x (2/0 to 300)	2x (4/0 to 300)	2x (250 to 300)	2x (400 to 600)	--------	--------	--------	--------	--------	--------
220 to 240	1x (250 to 300)	2x (2/0 to 300)	2x (3/0 to 300)	2x (4/0 to 300)	2x (350 to 500)	2x (500 to 600)	--------	--------	--------	--------	--------
380 to 416	1x (1/0 to 3/0)	1x (3/0)	1x (250 to 300)	1x (300)	2x (3/0 to 300)	2x (4/0 to 300)	2x (300 to 600)	2x (400 to 600)	2x (500 to 600)	2x (600)	--------
440 to 480	1x (1 to 2/0)	1x (2/0 to 3/0)	1x (3/0 to 300)	1x (4/0 to 300)	2x (1/0 to 300)	2x (3/0 to 300)	2x (4/0 to 600)	2x (300 to 600)	2x (350 to 600)	2x (400 to 600)	2x (500 to 600)
600	1x (3 to 2/0)	1x (1 to 3/0)	1x (2/0 to 300)	1x (3/0 to 300)	2x (1 to 300)	2x (2/0 to 300)	2x (3/0 to 300)	2x (4/0 to 600)	2X (250 to 600)	2x (300 to 600)	2x (350 to 600)

ALUMINUM CONDUCTORS for Contactor (1M).***

Field Wiring According to Bending Space (AWG or MCM). Terminals T1 - T2 - T3

HP / Voltage	5	7.5	10	15	20	25	30	40	50	60
208	1x (10 to 2/0) **	1x (10 to 2/0) **	1x (6 to 2/0) **	1x (4 to 2/0) **	1x (3 to 2/0) **	1x (1 to 2/0) **	1x (1/0 to 2/0) **	1x (2/0) 90°C *	Consult Factory	1x (300)
220 to 240	1x (10 to 2/0) **	1x (10 to 2/0) **	1x (8 to 2/0) **	1x (4 to 2/0) **	1x (3 to 2/0) **	1x (2 to 2/0) **	1x (1 to 2/0) **	1x (2/0)	1x (3/0) 90°C *	Consult Factory
380 to 416	1x (12 to 2/0) **	1x (12 to 2/0) **	1x (10 to 2/0) **	1x (8 to 2/0) **	1x (6 to 2/0) **	1x (4 to 2/0) **	1x (4 to 2/0) **	1x (2 to 2/0) **	1x (1 to 2/0) **	1x (1/0 to 2/0)
440 to 480	1x (12 to 2/0) **	1x (12 to 2/0) **	1x (10 to 2/0) **	1x (8 to 2/0) **	1x (8 to 2/0) **	1x (6 to 2/0) **	1x (6 to 2/0) **	1x (4 to 2/0) **	1x (2 to 2/0) **	1x (1 to 2/0)
600	1x (12 to 2/0) **	1x (12 to 2/0) **	1x (12 to 2/0) **	1x (10 to 2/0) **	1x (8 to 2/0) **	1x (8 to 2/0) **	1x (8 to 2/0) **	1x (4 to 2/0) **	1x (4 to 2/0) **	1x (2 to 2/0)

HP / Voltage	75	100	125	150	200	250	300	350	400	450	500
208	1x (300) 90°C *	2x (4/0 to 300)	2x (300)	2x (300) 90°C *	2x (600)	--------	--------	--------	--------	--------	--------
220 to 240	1x (300) 90°C *	2x (3/0 to 300)	2x (250 to 300)	2x (300)	2x (500)	2x (600)	--------	--------	--------	--------	--------
380 to 416	1x (3/0)	Consult Factory	1x (300) 90°C *	Consult Factory	2x (4/0 to 300)	2x (300)	2x (500 to 600)	2x (600)	2x (600) 90°C *	2x (600) 90°C *	--------
440 to 480	1x (1/0 to 2/0)	1x (3/0)	1x (250 to 300)	1x (300)	2x (3/0 to 300)	2x (250 to 300)	2x (300 to 600)	2x (400 to 600)	2x (500 to 600)	2x (600)	2x (600) 90°C *
600	1x (1 to 2/0)	1x (2/0 to 3/0)	1x (4/0 to 300)	1x (4/0 to 300)	2x (1/0 to 300)	2x (3/0 to 300)	2x (4/0 to 300)	2x (300 to 600)	2x (350 to 600)	2x (400 to 600)	2x (500 to 600)

*For standard enclosure, use 90°C aluminium wire. Consult Factory for Use of Conductors Rated Lower than 90°C.

** Option V659 required.

*** Aluminum is not permitted in Canada.

Motor Terminals

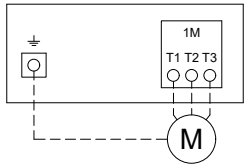

Model: GPA

Notes:

1 - For proper wire sizing, refer to NFPA70 and NEC (USA) or CEC (Canada) or local code.

2 - Controller suitable for use as service equipment in USA.

3 - Controller use as service equipment prohibited in Canada.

4 - For more accurate motor connections refer to motor manufacturer or motor nameplate.

5 - Controller is phase sensitive. Incoming lines must be connected in ABC sequence.

Drawing for information only.
Manufacturer reserves the right to modify this drawing without notice.
Contact manufacturer for "As Built" drawing.

Copyright © 2025 Tornatech Inc. All right reserved. This drawing and the information contained or depicted herein are the sole property of Tornatech Inc. Copies are communicated to the recipient in strict confidence and may not be retransmitted, published, reproduced, copied or used in any manner, including as the basis for the manufacture or sale of any products, without the express prior written consent of Tornatech Inc.

TORNATECH

© Tornatech, Inc. Not for construction.
Subject to change without notice.

	BY	DD/MM/YY
DRAWN BY	ACD	18/12/23
FINAL APPROVAL	FC	19/12/23

ELECTRIC FIRE PUMP CONTROLLER

MODEL:GPX

BUILT TO THE LATEST EDITION OF THE NFPA20 & NFPA70

NYC Dpt of Building Approved

DRAWING NUMBER
GPX-TD803/E
DWG REV. 0
SHEET 1 OF 1

Field Connections

Terminals Wire Size:
24 - 12 AWG
0.5 Nm

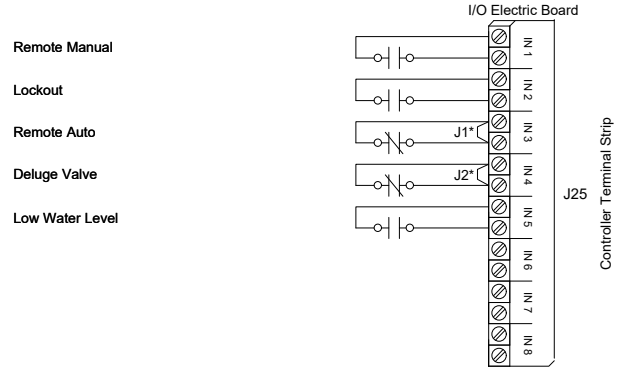

Network Connections

Terminals Wire Size:
Shielded Female Connector RJ45

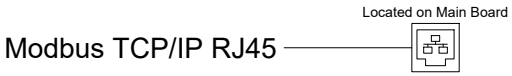

Alarm Contacts

Terminals Wire Size:
24 - 12 AWG
0.5 Nm

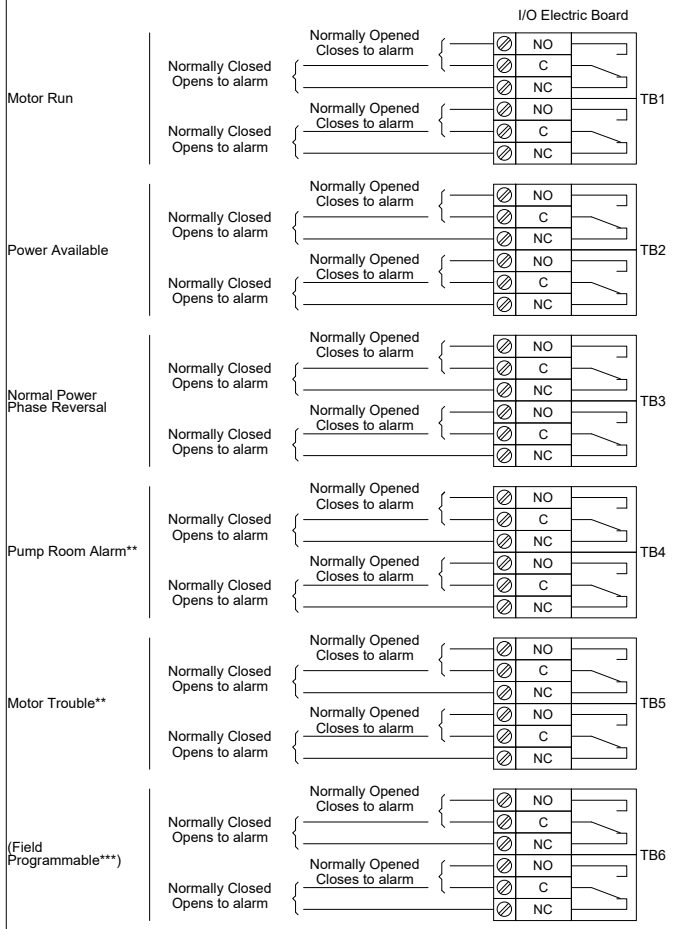

* Remove jumper to use this feature
** Re-assignable
*** Not available on GPS models

Copyright © 2025 Tornatech Inc. All right reserved. This drawing and the information contained or depicted herein are the sole property of Tornatech Inc. Copies are communicated to the recipient in strict confidence and may not be retransmitted, published, reproduced, copied or used in any manner, including as the basis for the manufacture or sale of any products, without the express prior written consent of Tornatech Inc.

Jockey Pump Data:

Submittal Data

PROJECT:	UNIT TAG:	QUANTITY:
	TYPE OF SERVICE:	
REPRESENTATIVE:	SUBMITTED BY:	DATE:
ENGINEER:	APPROVED BY:	DATE:
CONTRACTOR:	ORDER NO.:	DATE:

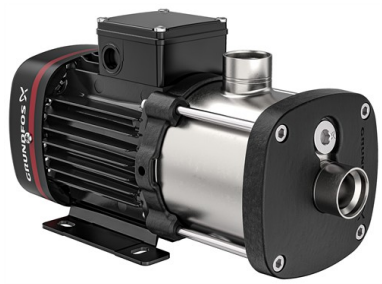

Note! Product picture may differ from actual product

CM 1-7 A-S-I-E-AQQE E-A-A-N

CM is a reliable, quiet and compact horizontal end-suction pump. The modular pump design makes it easy to make customised solutions. CM is available in cast iron and stainless steel.

Conditions of Service	
Liquid:	Water
Temperature:	68 °F
Specific Gravity:	1.000

Pump Data	
Max pressure at stated temp:	232 psi / 194 °F
Liquid temperature range:	-4 .. 248 °F
Maximum ambient temperature:	131 °F
Shaft seal:	AQQE
Product number:	98125790

Motor Data	
Mains frequency:	60 Hz
Enclosure class:	IP55

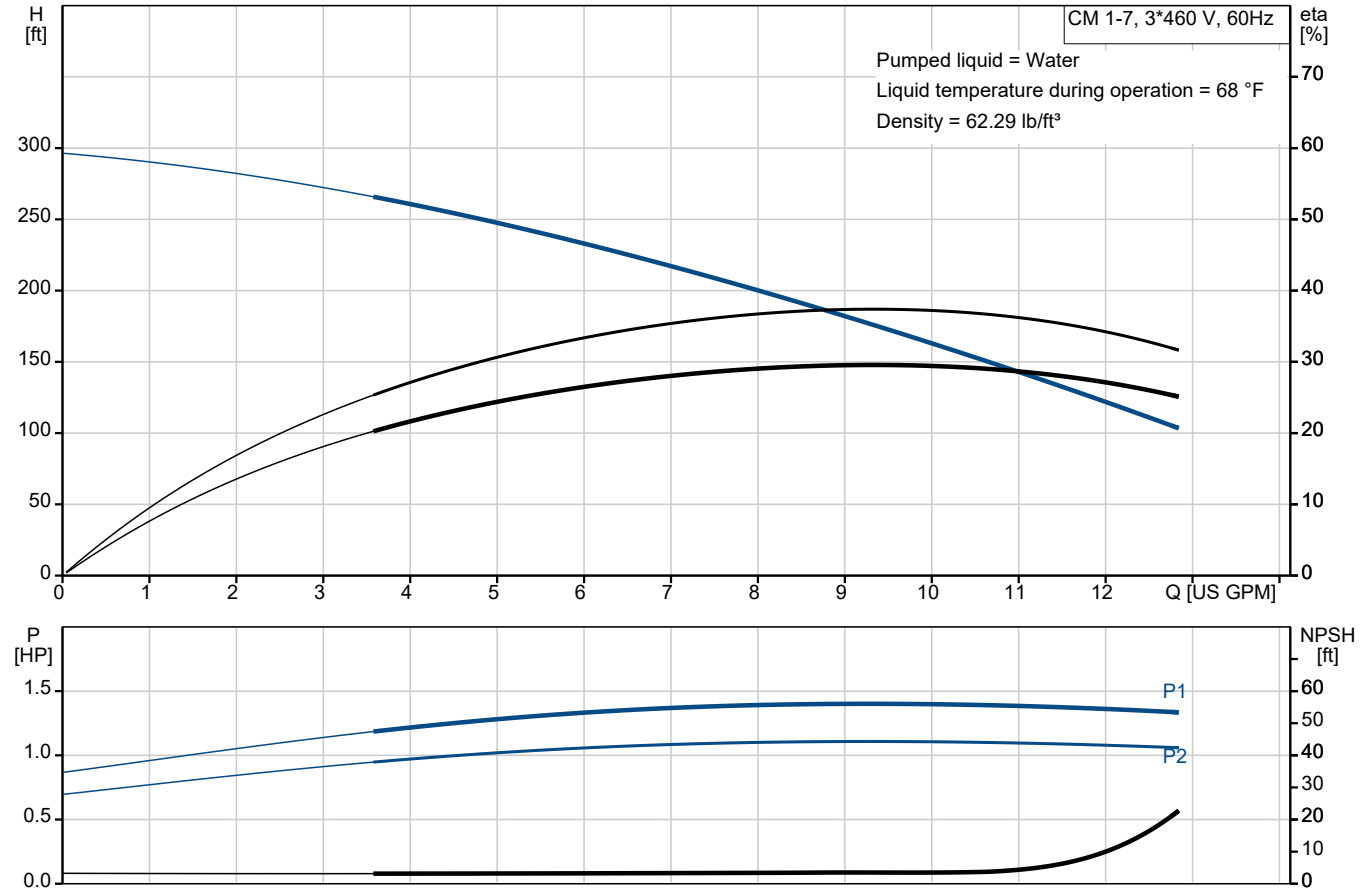

Performance

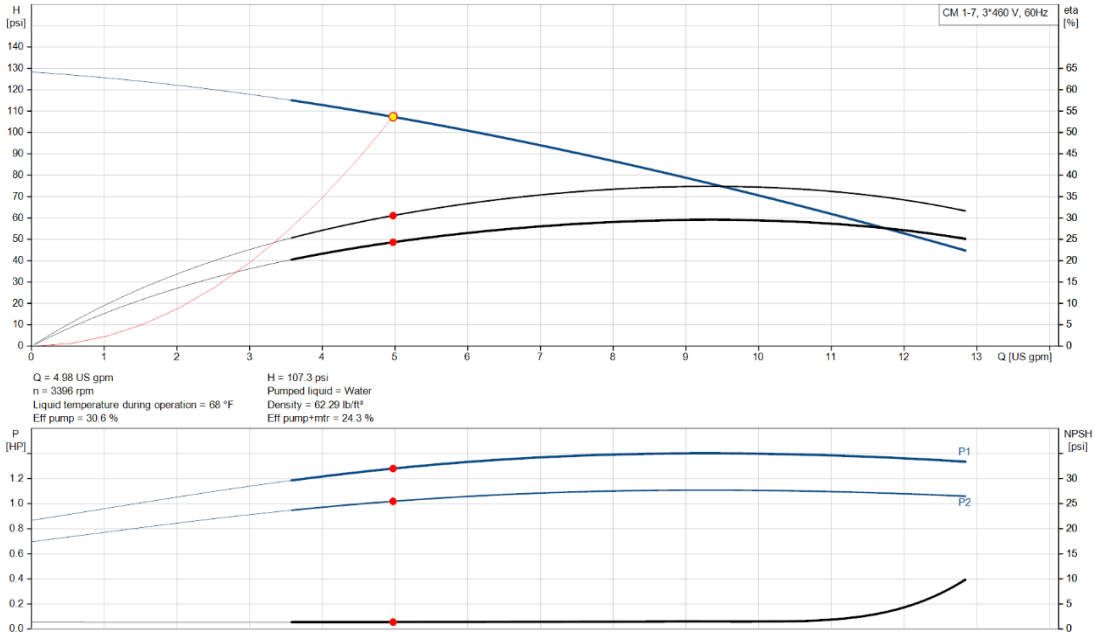

Settings

Operating point

Input:

Q

4.99 US gpm

H

108 psi

H static *

0 psi

Voltage

460 V

Motor

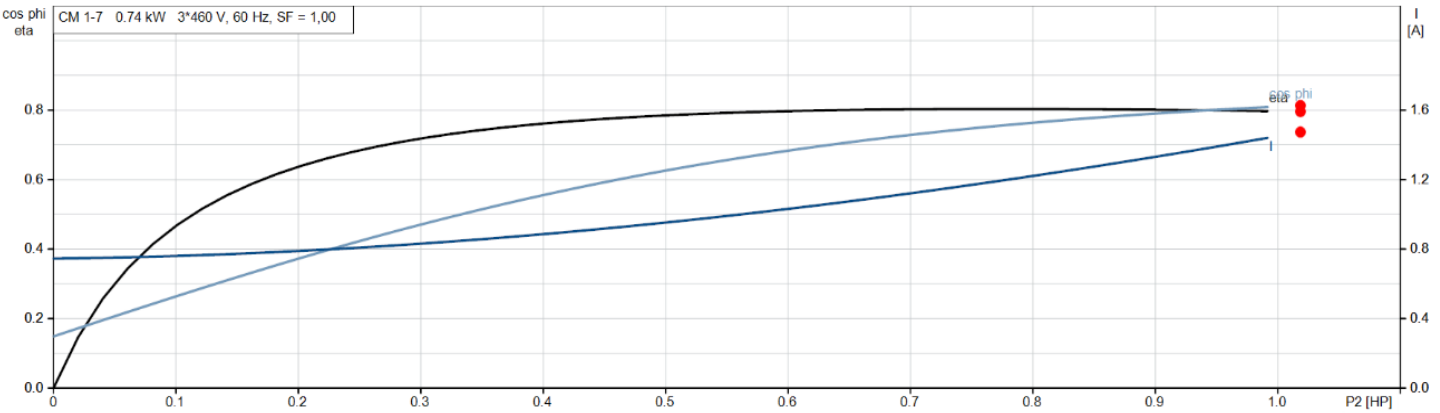

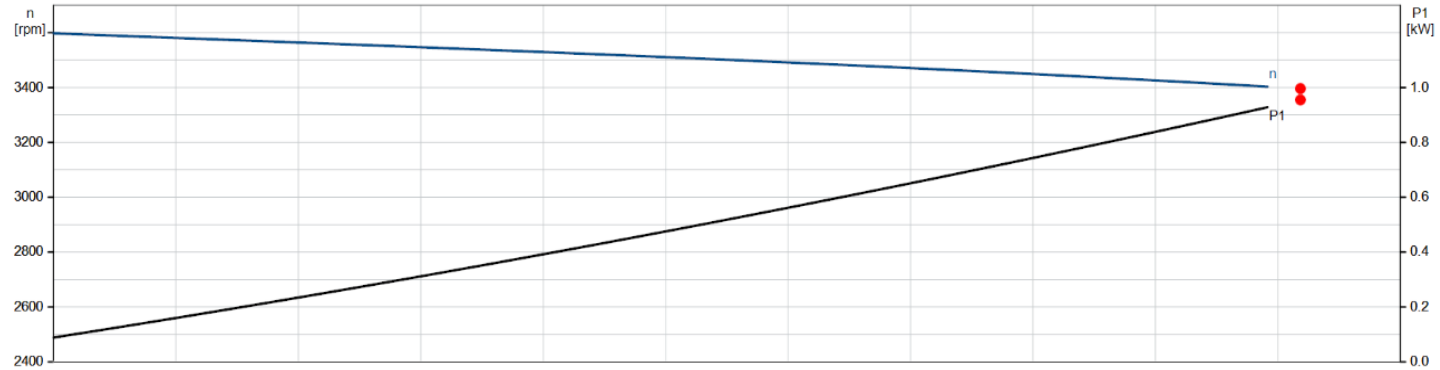

Submittal Data

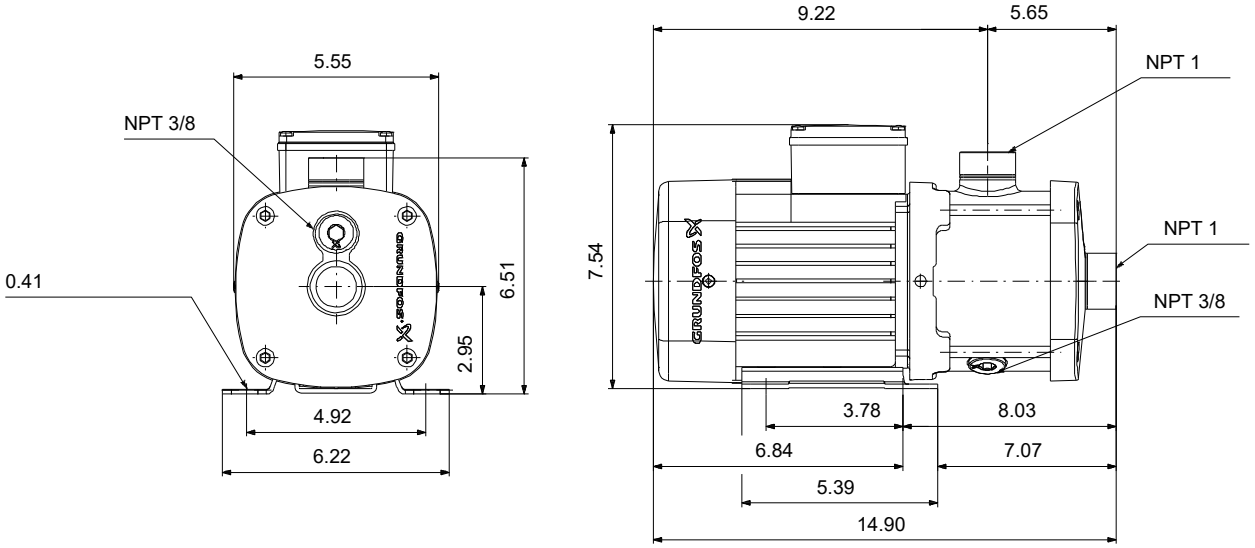

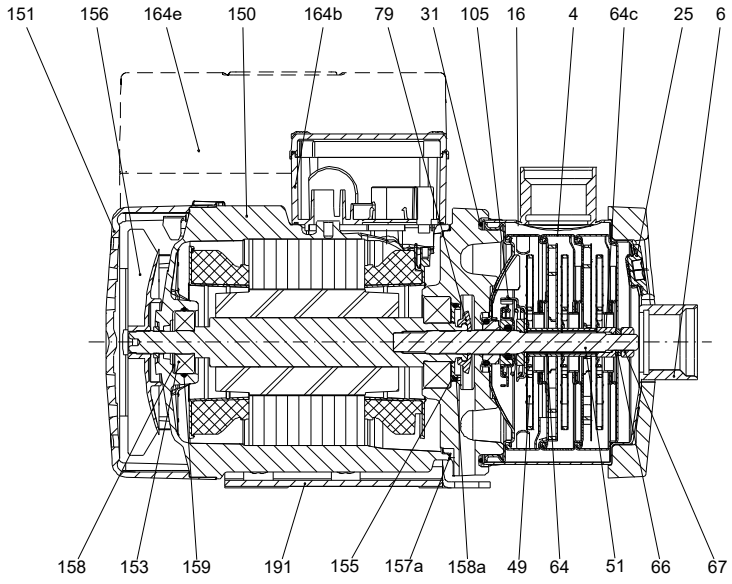

Materials:

Pump housing:	Stainless steel AISI 304
Impeller:	Stainless steel AISI 304 EN 1.4301
Material code:	I
Code for rubber:	E

165x100

GRUNDFOS

Company name:
Created by:
Phone:

Date: 07/08/2026

Qty.	Description
1	**CM 1-7 A-S-I-E-AQQE E-A-A-N**

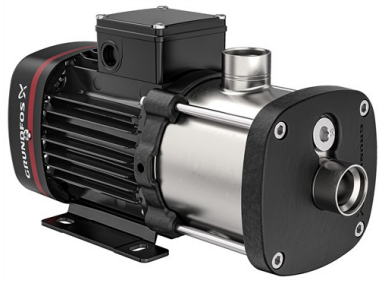

Note! Product picture may differ from actual product

Product No.: 98125790

Compact, reliable, horizontal, multistage, end-suction centrifugal pump with axial suction port and radial discharge port. Pump materials in contact with the liquid are in stainless steel. The mechanical shaft seal is a special designed, unbalanced O-ring seal. Pipework connection is via internal NPT pipe threads.

The pump is fitted with a 3-phase, foot-mounted, fan-cooled asynchronous motor.

Controls:

Terminal box position:	12
Frequency converter:	None

Liquid:

Pumped liquid:	Water
Liquid temperature range:	-4 .. 248 °F
Selected liquid temperature:	68 °F
Density:	62.29 lb/ft³

Technical:

Pump speed on which pump data are based:	3480 rpm
Rated flow:	8.98 US GPM
Rated head:	208.2 ft
Primary shaft seal:	AQQE
Code for shaft seal:	AQQE
Approvals:	CE,CULUS,EAC,CURUS,UKCA
Approvals for drinking water:	WRAS,ACS,NSF61,UBA
Curve tolerance:	ISO9906:2012 3B

Materials:

Type key, code for materials:	I
Type key, code for rubber components. E = EPDM, V=FKM:	E
Pump housing:	Stainless steel
	EN 1.4301
	AISI 304
Impeller:	Stainless steel
	EN 1.4301
	AISI 304

Installation:

GRUNDFOS

Company name:
Created by:
Phone:

Date: 07/08/2026

Qty.	Description	
1	Range of ambient temperature:	-4 .. 131 °F
	Maximum operating pressure:	232.06 psi
	Max pressure at stated temp:	232 psi / 194 °F
		145 psi / 250 °F
	Type of connection:	NPT(F)
	Size of inlet connection:	1 inch
	Size of outlet connection:	1 inch
	Terminal box position:	12
	Outlet position:	12
	Electrical data:	
	Motor standard:	NEMA
	Frame size:	71BA
	IE efficiency class:	IE3 / NEMA Premium
	Rated power - P2:	0.992 HP
	Mains frequency:	60 Hz
	Suitable for 50/60 Hz (Yes/No):	N
	Rated voltage:	3 x 220-230YY/440-480Y V
	Service factor:	1.00
	Rated current:	3,4-3,6/1,7-1,8 A
	Rated speed:	3220-3370 rpm
	Enclosure class (IEC 34-5):	IP55
	Insulation class (IEC 85):	F
	Ex-protection standard:	NONE
	Cable included (Yes/No):	N
	Others:	
	Minimum efficiency index, MEI ≥:	0.68
	Net weight:	30.4 lb
	Gross weight:	35.9 lb
	Country of origin:	MX
	Custom tariff no.:	8413.70.2040

GRUNDFOS

Company name:
Created by:
Phone:

Date: 07/08/2026

Description	Value
Rated voltage:	3 x 220-230YY/440-480Y V
Service factor:	1.00
Rated current:	3,4-3,6/1,7-1,8 A
Rated speed:	3220-3370 rpm
Enclosure class (IEC 34-5):	IP55
Insulation class (IEC 85):	F
Ex-protection standard:	NONE
Cable included (Yes/No):	N
Controls:	
Terminal box position:	12
Frequency converter:	None
Others:	
Minimum efficiency index, MEI ≥:	0.68
Net weight:	30.4 lb
Gross weight:	35.9 lb
Country of origin:	MX
Custom tariff no.:	8413.70.2040

Company name:
Created by:
Phone:

Date: 07/08/2026

98125790 CM 1-7 A-S-I-E-AQQE E-A-A-N 60 Hz

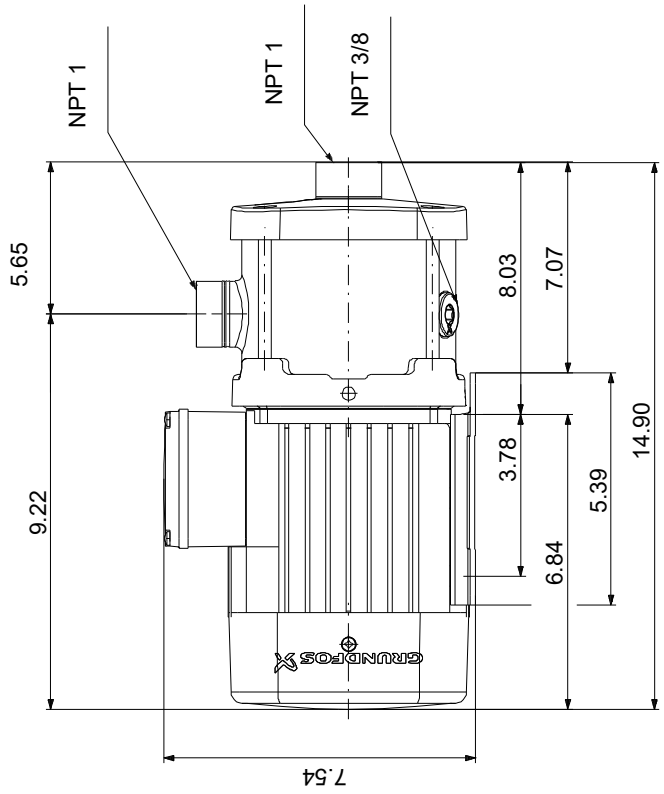

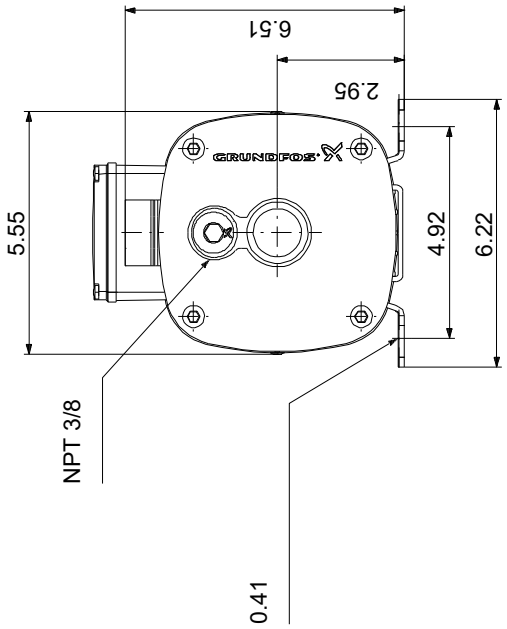

Note! All units are in [in] unless others are stated.
Disclaimer: This simplified dimensional drawing does not show all details.

Company name:
Created by:
Phone:

Date: 07/08/2026

98125790 CM 1-7 A-S-I-E-AQQE E-A-A-N 60 Hz

⚠ WARNING

MOTOR MUST BE GROUNDED IN ACCORDANCE WITH THE NATIONAL ELECTRICAL CODE AND LOCAL CODES BY TRAINED PERSONNEL TO PREVENT SERIOUS ELECTRICAL SHOCKS.

TO SERVICE MOTOR, DISCONNECT POWER SOURCE FROM MOTOR AND ANY ACCESSORY DEVICES AND ALLOW MOTOR TO COME TO A COMPLETE STAND STILL.

LOW VOLTAGE
60Hz. 208-230V

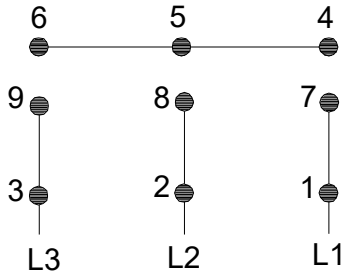

HIGH VOLTAGE
60Hz: 460V
50Hz: 400V

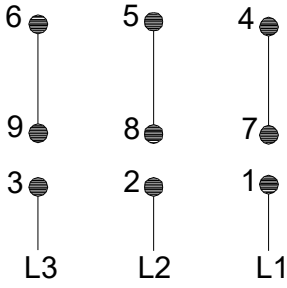

96553852

INTERCHANGE ANY TWO LINE
WIRES TO REVERSE ROTATION

THERMOSTAT LEADS — J
(WHEN PROVIDED) — J

Note! All units are in [in] unless others are stated.

Jockey Controller Data:

TORNATECH

Project: _____

Customer: _____

Engineer: _____

Pump Manufacturer: _____

Technical Data
Submittal Document

Model JPLT

Across the Line Start
Jockey Pump Controller

Contents:

Data Sheets
Dimensional Data
Wiring Schematics
Field Connections

Note: The drawings included in this package are for controllers covered under our standard offering. Actual AS BUILT drawings may differ from what is shown in this package.

c UL us N.Y.C. APPROVED CE OPTIONAL

October 2025

Select Incoming Voltage

☐ **110-120V/1Phase**

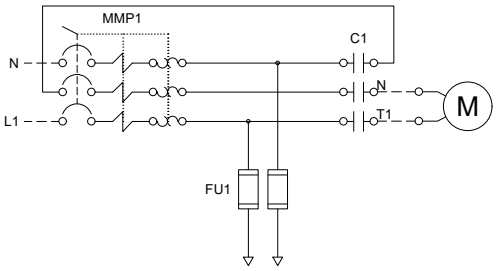

☐ **200-240V/1Phase**

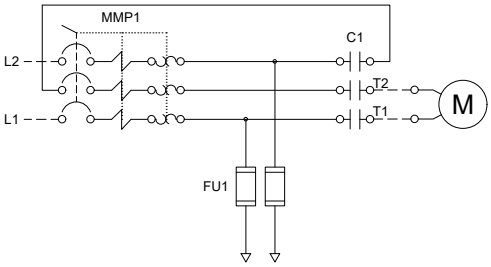

☑ **200-600V/3Phase**

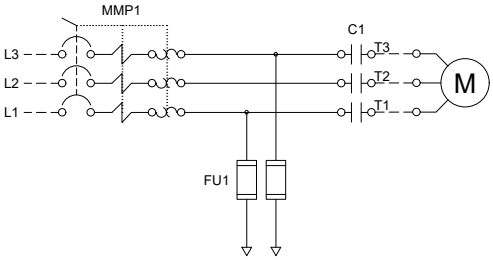

c UL us
N.Y.C. APPROVED
CE OPTIONAL

This is a Marketing document. Please consult factory for more information.
Manufacturer reserves the right to modify this information without notice

Select voltage and power rating

Voltage	Select Voltage	HP	Select HP
120V/1ph/60Hz[1]	☐	0.25	☐
200V/1ph/60Hz[2]	☐	0.33	☐
208V/1ph/60Hz[2]	☐	0.5	☐
220V/1ph/60Hz[2]	☐	0.75	☐
230V/1ph/60Hz[2]	☐	1	☐
240V/1ph/60Hz[2]	☐	1.5	☑
200V/3ph/50-60Hz[3]	☐	2	☐
208V/3ph/50-60Hz[3]	☑	3	☐
220V/3ph/50-60Hz[4]	☐	5	☐
230V/3ph/50-60Hz[4]	☐	7.5	☐
240V/3ph/50-60Hz[4]	☐	10	☐
380V/3ph/50-60Hz[5]	☐	15	☐
400V/3ph/50-60Hz[5]	☐	20	☐
415V/3ph/50-60Hz[5]	☐	25	☐
440V/3ph/50-60Hz[6]	☐		
460V/3ph/50-60Hz[6]	☐		
480V/3ph/50-60Hz[6]	☐		
575V/3ph/60Hz[7]	☐		
600V/3ph/60Hz[7]	☐		

Notes: [1] Maximum power rating is 5HP.
[2] Maximum power rating is 10HP.
[3] Maximum power rating is 7.5HP.
[4] Maximum power rating is 10HP.
[5] Maximum power rating is 15HP.
[6] Maximum power rating is 20HP.
[7] Maximum power rating is 25HP.

Listing	Underwriters Laboratory (UL)	UL508A - Industrial Pump Controllers
	New York City	Accepted for use in the City of New York by the Department of Buildings
	Optional	
	☐ CE Mark	Various EN, IEC & CEE directives and standards
Enclosure	**Protection Rating** ☑ Standard: NEMA 2 **Optional** ☐ NEMA 12 ☐ NEMA 3 ☐ NEMA 3R ☐ NEMA 4 ☐ NEMA 4X-304 sst painted ☐ NEMA 4X-304 sst brushed finish ☐ NEMA 4X-316 sst painted ☐ NEMA 4X-316 sst brushed finish	
	Accessories • Wall mounting lugs (x4)	**Paint Specifications** • Red RAL3002 • Powder coating • Glossy textured finish

This is a Marketing document. Please consult factory for more information.
Manufacturer reserves the right to modify this information without notice

Short circuit current rating

	Voltage						
	Single Phase		Three Phase				
HP	110 - 120V	200 - 240V	200 - 208V	220 - 240V	380 - 415V	440 - 480V	600V
0.25	65kA	65kA	65kA	65kA	65kA	65kA	10kA
0.5	65kA	65kA	65kA	65kA	65kA	65kA	10kA
0.75	42kA	65kA	65kA	65kA	65kA	65kA	10kA
1	42kA	65kA	65kA	65kA	65kA	65kA	10kA
1.5	42kA	65kA	65kA	65kA	65kA	65kA	10kA
2	42kA	65kA	65kA	65kA	65kA	65kA	10kA
3	CF	42kA	65kA	65kA	65kA	65kA	10kA
4	CF	42kA	42kA	42kA	65kA	65kA	10kA
5	CF	42kA	42kA	42kA	65kA	65kA	10kA
5.5	CF	CF	42kA	42kA	65kA	65kA	10kA
7.5	CF	CF	42kA	42kA	42kA	65kA	10kA
10	CF	CF	CF	42kA	42kA	42kA	10kA
15	CF	CF	CF	CF	42kA	42kA	5kA
20	CF	CF	CF	CF	CF	42kA	5kA
25	CF	CF	CF	CF	CF	CF	5kA

This is a Marketing document. Please consult factory for more information.
Manufacturer reserves the right to modify this information without notice

Fuseless Motor Starter	• Type -F fuse-less magnetic motor starter • Rotary handle, padlockable • Door interlocked		
Control Circuit	• 24V.AC		
ViZiLT Operator Interface	• High luminosity alphanumeric digital display • HAND-OFF-AUTO pushbuttons • MENU navigation pushbuttons		
Pressure Sensing	• Pressure transducer for fresh water application 316 stainless steel construction • Rated for 0-600psi working pressure • Pressure sensing line connection 1/2” brass Male NPT		
Visual Indications	• H-O-A position • System pressure • Cut-out and Cut-In pressure setting • Manual motor run • Automatic motor run • Motor overload (occured) • Pump start counter • Elapsed time meter (hours / non-resettable)		
Timers	• Minimum run timer (off delay) • Delay start timer (on delay) • Visual countdown		
Counters	• Pump start counter • Elapsed timer meter (hours / non-resettable)		
Operators	• Main disconnect handle • HAND-OFF-AUTO pushbuttons • MENU navigation pushbuttons		
Operation	Automatic Start	Start on pressure drop	
	Manual Start	Start pushbutton	
	Stopping	Stop pushbutton	
	Timers	Field adjustable & visual countdown	• Minimum run timer (off delay) • Delay start timer (on delay)

This is a Marketing document. Please consult factory for more information.
Manufacturer reserves the right to modify this information without notice

☐ A5	Motor run alarm contact
☐ A6	Loss of power alarm contact
☐ A7	Overload or short circuit alarm contact
☐ D11D	Pressure transducer 0-600psi with ½" MNPT 316 stainless steel bushing
☐ D13A	Externally mounted wetted parts
☐ D18	Audible alarm
☐ D19	Anti-condensation heater and thermostat
☐ D20	Anti-condensation heater and humidistat
☐ D21	Tropicalization
☐ D22	Phase reversal / failure pilot light and alarm contact
☐ D23	Controller power healthy pilot light and alarm contact
☐ D24	Pump failure via current sensing relay with pilot light and dry alarm contact
☐ D25	Low zone pump control function
☐ D26	Mid zone pump control function
☐ D27	High zone pump control function
☐ D28	Controller in AUTO alarm contacts
☐ D29	Controller not in AUTO alarm contacts
☐ D30	Motor heater circuit
☐ D35	Seismic Certification compliant to CBC 2019, IBC 2018 rigid base/wall mounted only
☐ D36	Special Seismic Certification compliant to OSHPD rigid base/wall mounted only
☐ D37	100kA high short circuit withstand rating for 200V to 600V

☐ L01	Other language and English (bilingual)
☐ L02	French
☐ L03	Spanish
☐ L04	German
☐ L05	Italian
☐ L06	Polish
☐ L07	Romanian
☐ L08	Hungarian
☐ L09	Slovakian
☐ L10	Croatian
☐ L11	Czech
☐ L12	Portuguese
☐ L13	Dutch
☐ L15	Turkish
☐ L16	Swedish
☐ L21	Danish
☐ L28	Finnish
☐ L29	Norwegian

Note: Options chosen from this page are not electrically represented on the wiring schematics in this submittal package.

This is a Marketing document. Please consult factory for more information.
Manufacturer reserves the right to modify this information without notice

ViZiLT Operator Interface

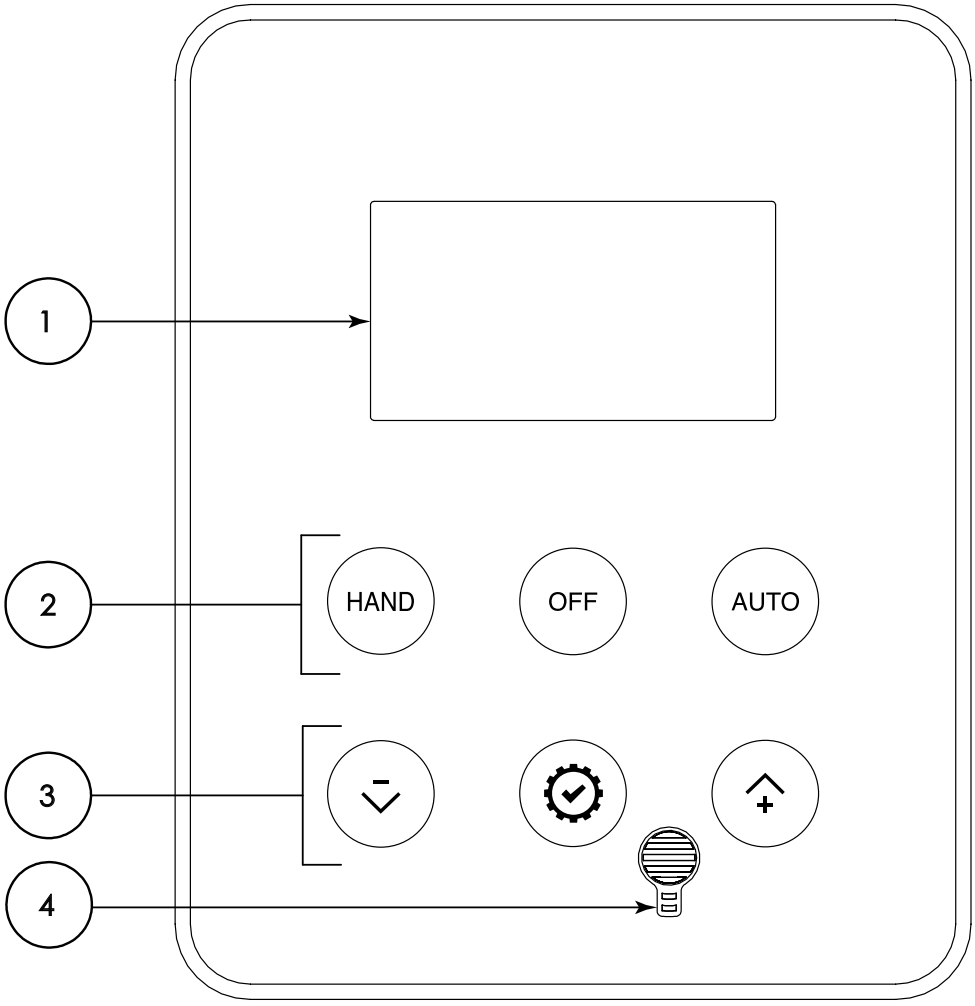

1 - High luminosity alphanumeric digital display
2 - HAND-OFF-AUTO pushbuttons
3 - MENU navigation pushbuttons
4 - Audible Alarm

This is a Marketing document. Please consult factory for more information.
Manufacturer reserves the right to modify this information without notice

TORNATECH

© Tornatech, Inc. Not for construction.
Subject to change without notice.

	BY	DD/MM/YY
DRAWN BY	ACD	15/05/23
FINAL APPROVAL	FC	15/05/23

JOCKEY PUMP CONTROLLER

MODEL: JPLT

BUILT TO THE LATEST EDITION OF THE UL 508A

NYC Dpt of Building Approved

THIRD ANGLE PROJECTION

DRAWING NUMBER JPLT-DI001/E
DWG REV. 0
SHEET 1 OF 1

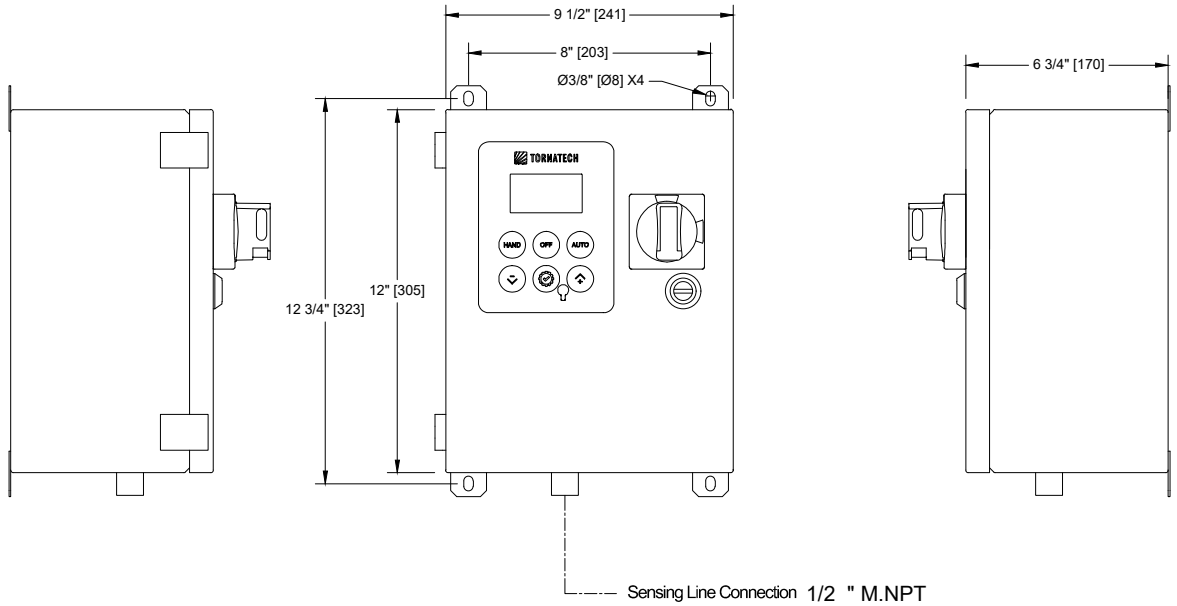

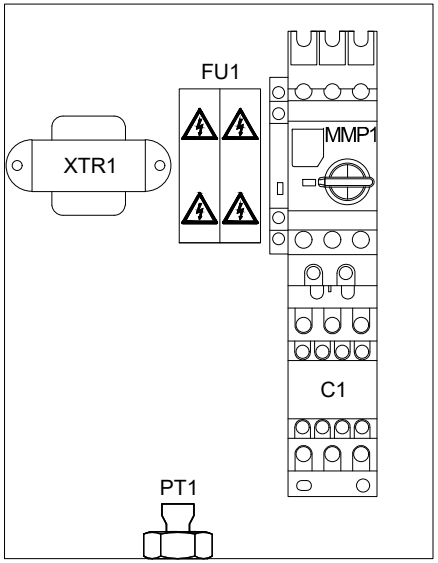

Standard Internal Layout

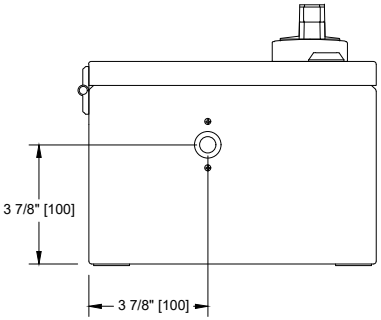

Voltage / Power Table	
Voltage	Max HP
1 Phase	
110 - 120	2
200 - 208	5
220 - 240	5
3 Phases	
200 - 208	7.5
220 - 240	10
380 - 400 - 415	15
440 - 480	20
600	25

Notes:
- Standard NEMA: NEMA 2
- Standard Paint: Textured Red RAL 3002.
- All Dimensions are in Inches [Millimeters]
- Use Watertight Conduit and Connector Only.
- Protect Equipment Against Drilling Chips.
- Door Swing Equal to Door Width

Drawing for information only.
Manufacturer reserves the right to modify this drawing without notice.
Contact manufacturer for "As Built" drawing.
*Dimensions may change depending on option required. Consult Factory for exact dimensions.

Copyright © 2025 Tornatech Inc. All right reserved. This drawing and the information contained or depicted herein are the sole property of Tornatech Inc. Copies are communicated to the recipient in strict confidence and may not be retransmitted, published, reproduced, copied or used in any manner, including as the basis for the manufacture or sale of any products, without the express prior written consent of Tornatech Inc.

TORNATECH

© Tornatech, Inc. Not for construction.
Subject to change without notice.

	BY	DD/MM/YY
DRAWN BY	ACD	15/05/23
FINAL APPROVAL	FC	15/05/23

JOCKEY PUMP CONTROLLER ACROSS THE LINE / 3 PHASES

MODEL: JPLT

BUILT TO THE LATEST EDITION OF THE UL 508A

NYC Dpt of Building Approved

DRAWING NUMBER JPLT-WS003/E

DWG REV. 0

SHEET 1 OF 1

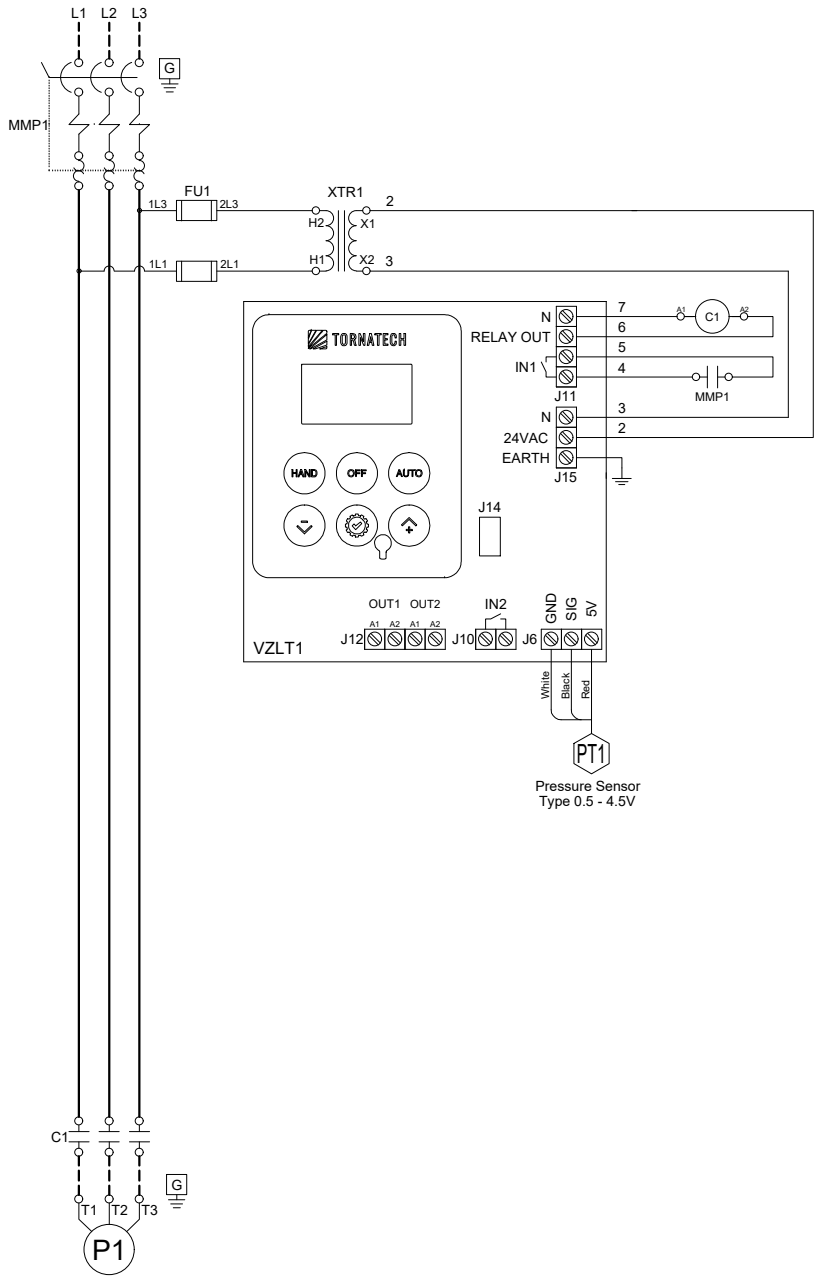

Copyright © 2025 Tornatech Inc. All right reserved. This drawing and the information contained or depicted herein are the sole property of Tornatech Inc. Copies are communicated to the recipient in strict confidence and may not be retransmitted, published, reproduced, copied or used in any manner, including as the basis for the manufacture or sale of any products, without the express prior written consent of Tornatech Inc.

TORNATECH

© Tornatech, Inc. Not for construction. Subject to change without notice.

	BY	DD/MM/YY
DRAWN BY	ACD	15/05/23
FINAL APPROVAL	FC	15/05/23

JOCKEY PUMP CONTROLLER ACROSS THE LINE / 3 PHASES

MODEL: JPLT

BUILT TO THE LATEST EDITION OF THE UL 508A

NYC Dpt of Building Approved

DRAWING NUMBER JPLT-TD003/E

DWG REV. 0

SHEET 1 OF 1

Power Connections and Motor Connections

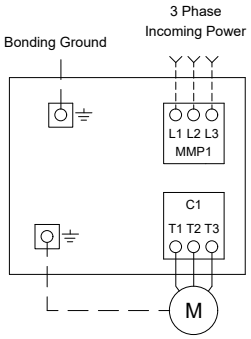

Line Terminals (L1,L2,L3,GND)							
Maximum Motor Horsepower					Wire Size Copper Only	Torque	Wire Size Ground Copper Only
200-208V	220-240V	380-416V	440-480V	575-600V			
7.5HP	10HP	15HP	20HP	25HP	#14 AWG - #8 AWG	2.5 Nm	#14 AWG - #2 AWG

Motor Terminals (T1,T2,T3,GND)							
Maximum Motor Horsepower					Wire Size Copper Only	Torque	Wire Size Ground Copper Only
200-208V	220-240V	380-416V	440-480V	575-600V			
3HP	4HP	5.5HP	7.5HP	10HP	#14 AWG - #10 AWG	1.7 Nm	#14 AWG - #2 AWG
7.5HP	10HP	15HP	20HP	25HP	#14 AWG - #8 AWG	2.5 Nm	#12 AWG - #2 AWG

Copyright © 2025 Tornatech Inc. All right reserved. This drawing and the information contained or depicted herein are the sole property of Tornatech Inc. Copies are communicated to the recipient in strict confidence and may not be retransmitted, published, reproduced, copied or used in any manner, including as the basis for the manufacture or sale of any products, without the express prior written consent of Tornatech Inc.

Valves:

Gate Valves

SERIES 771H OS&Y GROOVE x GROOVE
SERIES 772H NRS GROOVE x GROOVE
SERIES 771F OS&Y GROOVE x FLANGE
SERIES 772F NRS GROOVE x FLANGE
SERIES 773 WALL POST INDICATOR
SERIES 774 UPRIGHT POST INDICATOR

The Series 771H OS&Y and Series 771F OS&Y gate valves are used when positive shut off is required and a quick visual indicator of open/closed position is required. The Series 772H NRS and Series 772F NRS gate valves are typically used for shut-off service where the valve is operated remotely, such as when the valve is behind a wall or buried. Series 772H NRS and Series 772F NRS gate valves are offered with optional wall (Series 773) or upright (Series 774) post indicators.

FM cULus LISTED



SERIES 771H | SERIES 772H | SERIES 774 | SERIES 771F | SERIES 772F | SERIES 773

MATERIAL SPECIFICATIONS

Series 771 OS & Y and 772 NRS Gate Valves

Body: Ductile iron conforming to ASTM A-536 grade 65-45-12

Body Gasket: EPDM

Body Bolts: Plated Steel w/ Plastic Covers

Handwheel:

OS & Y Yoke (Series 771 only): Ductile iron conforming to ASTM A-536 grade 65-45-12

Bonnet: Ductile iron conforming to ASTM A536 grade 65-45-12

Bonnet/Body Coating: Fusion bonded Epoxy coating

Gate: Cast iron, EPDM coated

Gate Nut: Bronze, conforming to ASTM B62

Stem: Brass, ASTM B16

Continued on page 2.

JOB/OWNER
System No. _____
Location _____

CONTRACTOR
Submitted By _____
Date _____

ENGINEER
Spec Sect _____ Para _____
Approved _____
Date _____

VICTAULIC IS A REGISTERED TRADEMARK OF VICTAULIC COMPANY. © 2021 VICTAULIC COMPANY. ALL RIGHTS RESERVED.

Gate Valves

SERIES 771H OS&Y GROOVE x GROOVE
SERIES 772H NRS GROOVE x GROOVE
SERIES 771F OS&Y GROOVE x FLANGE
SERIES 772F NRS GROOVE x FLANGE
SERIES 773 WALL POST INDICATOR
SERIES 774 UPRIGHT POST INDICATOR

MATERIAL SPECIFICATIONS

Continued from page 1

O-Ring Seals: EPDM

Optional:

- **Indicator Post Flange:** Ductile iron conforming to ASTM A-536 grade 65-45-12 available for NRS valves only

Series 773 & 774 Indicators

Target Frame: Bronze conforming to ASTM B62

Window: Polycarbonate

Series 773 Wall Post Indicator:

Body: Cast iron conforming to ASTM A-126-B

Operating Stem: Bronze conforming to ASTM B62

Operating Rod: Carbon steel

Series 774 Upright Indicators:

Body: Cast iron conforming to ASTM A-126-B

Extension Sleeve: Cast iron conforming to ASTM A-126-B

CERTIFICATIONS/LISTINGS

Inches DN	Series 771H		Series 772H		Series 771F		Series 772F	
	cULus	FM	cULus	FM	cULus	FM	cULus	FM
2½ DN65	250 psi 1725 kPa	250 psi/1725 kPa	250 psi/1725 kPa	250 psi/1725 kPa	250 psi/1725 kPa	250 psi/1725 kPa	250 psi/1725 kPa	250 psi/1725 kPa
76.1 mm	250 psi/1725 kPa	250 psi/1725 kPa	250 psi/1725 kPa	250 psi/1725 kPa	250 psi/1725 kPa	250 psi/1725 kPa	250 psi/1725 kPa	250 psi/1725 kPa
3 DN80	250 psi/1725 kPa	250 psi/1725 kPa	250 psi/1725 kPa	250 psi/1725 kPa	250 psi/1725 kPa	250 psi/1725 kPa	250 psi/1725 kPa	250 psi/1725 kPa
4 DN100	250 psi/1725 kPa	250 psi/1725 kPa	250 psi/1725 kPa	250 psi/1725 kPa	250 psi/1725 kPa	250 psi/1725 kPa	250 psi/1725 kPa	250 psi/1725 kPa
165.1 mm	250 psi/1725 kPa	250 psi/1725 kPa	250 psi/1725 kPa	250 psi/1725 kPa	250 psi/1725 kPa	250 psi/1725 kPa	250 psi/1725 kPa	250 psi/1725 kPa
6 DN150	250 psi/1725 kPa	250 psi/1725 kPa	250 psi/1725 kPa	250 psi/1725 kPa	250 psi/1725 kPa	250 psi/1725 kPa	250 psi/1725 kPa	250 psi/1725 kPa
8 DN200	250 psi/1725 kPa	250 psi/1725 kPa	250 psi/1725 kPa	250 psi/1725 kPa	250 psi/1725 kPa	250 psi/1725 kPa	250 psi/1725 kPa	250 psi/1725 kPa
10 DN250	250 psi/1725 kPa	250 psi/1725 kPa	250 psi/1725 kPa	250 psi/1725 kPa	250 psi/1725 kPa	250 psi/1725 kPa	250 psi/1725 kPa	250 psi/1725 kPa
12 DN300	250 psi/1725 kPa	250 psi/1725 kPa	250 psi/1725 kPa	–	250 psi/1725 kPa	–	250 psi/1725 kPa	–
14 DN350	250 psi/1725 kPa	–	250 psi/1725 kPa	–	250 psi/1725 kPa	–	250 psi/1725 kPa	–
16 DN400	250 psi/1725 kPa	–	250 psi/1725 kPa	–	250 psi/1725 kPa	–	250 psi/1725 kPa	–

VICTAULIC IS A REGISTERED TRADEMARK OF VICTAULIC COMPANY. © 2021 VICTAULIC COMPANY. ALL RIGHTS RESERVED.

Gate Valves

SERIES 771H OS&Y GROOVE x GROOVE
SERIES 772H NRS GROOVE x GROOVE
SERIES 771F OS&Y GROOVE x FLANGE
SERIES 772F NRS GROOVE x FLANGE
SERIES 773 WALL POST INDICATOR
SERIES 774 UPRIGHT POST INDICATOR

DIMENSIONS

Series 771H OS&Y and Series 772H
Grooved x Grooved

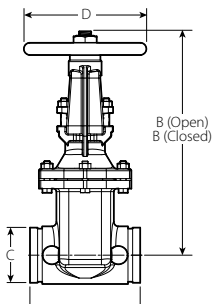

SERIES 771H

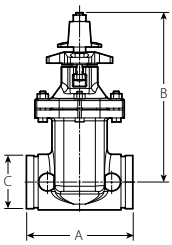

SERIES 772H

Size		Dimensions – Inches/mm						Approx. Weight Each Lbs./kg	
Nomial Size Inches DN	Actual Outside Dia. Inches mm	A	Series 771H Height B Closed	Series 771H Height B Open	Series 772H Height B	C	D	Series 771H	Series 772H
2½ DN65	2.88 73.0	7.500 190.5	16.18 411	18.74 476	11.02 280	2.88 73	7.87 200	31.5 14.3	22.05 10
76.1 mm	3.00 76.1	7.500 190.5	16.18 411	19.18 487.1	11.02 280	3.00 76.1	7.87 200	31.5 14.3	22.05 10
3 DN80	3.50 88.9	7.992 203	17.09 434	20.34 514	12.21 310	3.50 88.9	7.87 200	39.3 17.8	29.77 13.5
4 DN100	4.50 114.3	9.016 229	18.11 460	22.05 560	13.58 345	4.50 114.3	10.24 260	55.4 25.1	39.69 18
165.1 mm	6.50 165.1	10.512 267	23.90 607	30.40 772.1	17.13 435	6.50 165.1	12.40 315	104.8 47.5	81.13 36.8
6 DN150	6.63 168.3	10.512 267	23.90 607	29.80 757	17.13 435	6.63 168.3	12.40 250	104.8 47.5	81.13 36.8
8 DN200	8.63 219.1	11.496 292	28.59 726	36.46 926	20.12 511	8.63 219.1	14.76 375	174.0 78.9	134.49 61
10 DN250	10.75 273	12.992 330	35.04 890	44.88 1140	24.02 610	10.75 273	16.38 416	262.4 119	194.00 88
12 DN300	12.75 323.9	14.016 356	40.12 1019	51.93 1319	27.68 703	12.75 323.9	17.52 445	392.9 178.2	310.41 140.8

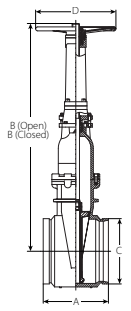

SERIES 771H

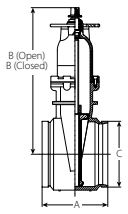

SERIES 772H

Size		Dimensions – Inches/mm						Approx. Weight Each Lbs./kg	
Nomial Size Inches DN	Actual Outside Dia. Inches mm	A	Series 771H Height B Closed	Series 771H Height B Open	Series 772H Height B	C	D	Series 771H	Series 772H
14 DN350	14.000 355.6	15.00 381	53.00 1346	66.75 1695	32.50 826	14.00 356	19.63 498	586.0 266	492.0 223
16 DN400	16.000 406.4	16.00 406	55.88 1419	71.63 1819	36.00 914	16.00 406	19.63 498	776.0 352	667.0 307

VICTAULIC IS A REGISTERED TRADEMARK OF VICTAULIC COMPANY. © 2021 VICTAULIC COMPANY. ALL RIGHTS RESERVED.

Gate Valves

SERIES 771H OS&Y GROOVE x GROOVE
SERIES 772H NRS GROOVE x GROOVE
SERIES 771F OS&Y GROOVE x FLANGE
SERIES 772F NRS GROOVE x FLANGE
SERIES 773 WALL POST INDICATOR
SERIES 774 UPRIGHT POST INDICATOR

WARRANTY

Refer to the Warranty section of the current Price List or contact Victaulic for details.

NOTE

This product shall be manufactured by Victaulic or to Victaulic specifications. All products to be installed in accordance with current Victaulic installation/assembly instructions. Victaulic reserves the right to change product specifications, designs and standard equipment without notice and without incurring obligations.

⚠ WARNING



- **Read and understand all instructions before attempting to install any Victaulic products.**
- **Always verify that the piping system has been completely depressurized and drained immediately prior to installation, removal, adjustment, or maintenance of any Victaulic products.**
- **Wear safety glasses, hardhat, and foot protection.**

Failure to follow these instructions could result in death or serious personal injury and property damage.

- **These products shall be used only in fire protection systems that are designed and installed in accordance with current, applicable National Fire Protection Association (NFPA 13, 13D, 13R, etc.) standards, or equivalent standards, and in accordance with applicable building and fire codes. These standards and codes contain important information regarding protection of systems from freezing temperatures, corrosion, mechanical damage, etc.**
- **The installer shall understand the use of this product and why it was specified for the particular application.**
- **The installer shall understand common industry safety standards and potential consequences of improper product installation.**
- **It is the system designer's responsibility to verify suitability of materials for use with the intended fluid media within the piping system and external environment.**
- **The material specifier shall evaluate the effect of chemical composition, pH level, operating temperature, chloride level, oxygen level, and flow rate on materials to confirm system life will be acceptable for the intended service.**

Failure to follow installation requirements and local and national codes and standards could compromise system integrity or cause system failure, resulting in death or serious personal injury and property damage.

10.92 3003 REV G UPDATED 04/2021

VICTAULIC IS A REGISTERED TRADEMARK OF VICTAULIC COMPANY. © 2021 VICTAULIC COMPANY. ALL RIGHTS RESERVED.

FireLock® Check Valves

SERIES 717

SEE VICTAULIC PUBLICATION 10.01 FOR DETAILS



Series 717 FireLock check valve is a CAD-developed design that is hydrodynamically efficient. A totally rubber encapsulated disc on 4 – 12"/100 – 300 mm sizes provides superior corrosion resistance. This single disc design incorporates a spring assisted feature for non-slamming operation. For systems requiring a Riser Check option refer to section 10.09.

The 4"/100 mm and larger sizes are provided with upstream and downstream drains and a welded-in nickel seat design. All sizes of Series 717 can be installed in the vertical or horizontal position to provide leak-free sealing under conditions as low as five feet of head. Each valve is factory tested to 500 psi/3440 kPa. The 2 ½ and 3"/65 and 80 mm sizes are UL/ULC Listed and 4"/100 mm sizes and larger are UL/ULC Listed and FM Approved for services up to 250 psi/1725 kPa. Sizes 4 – 8"/100 – 200 mm (except 165.1 mm size) are VdS approved.

Grooved ends allow fast, easy installation with just two Victaulic couplings or the valve may be mounted to flanged (ANSI CL.150) equipment using either to Victaulic Style 741 Vic-Flange® or Style 744 FireLock flange adapters on either end.

DIMENSIONS

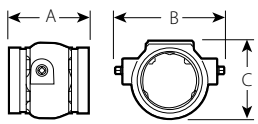

TYPICAL 2 ½ – 3"/65 – 80 MM

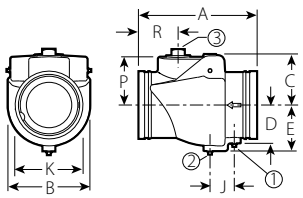

① ½" NPT Upstream Drain
② ½" NPT Downstream Drain
③ 2" NPT (Drain Optional)

TYPICAL 4 – 8"/100 – 200 MM

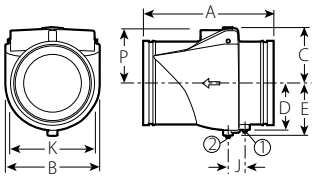

① ½" NPT Upstream Drain
② ½" NPT Downstream Drain

TYPICAL 10 – 12"/250 – 300 MM

Size		Dimensions- Inches/millimeters									Approx. Wgt. Ea.
Nominal Size Inches mm	Actual Outside Diameter Inches mm	E to E A	B	C	D	E	J	K	P	R	Lbs. kg
2 ½ 65	2.875 73.0	3.88 99	4.26 108	3.57 91	—	—	—	—	—	—	3.6 1.6
76.1 mm	3.000 76.1	3.88 99	4.26 108	3.57 91	—	—	—	—	—	—	3.6 1.6
3 80	3.500 88.9	4.25 108	5.06 129	4.17 106	—	—	—	—	—	—	4.5 2.0
4 † 100	4.500 114.3	9.63 245	6.00 152	3.88 99	2.75 70	3.50 89	2.00 51	4.50 114	3.50 89	3.35 85	20.0 9.1
5 † 125	5.563 141.3	10.50 267	6.80 173	4.50 114	—	4.17 106	2.15 55	5.88 149	4.08 104	3.98 101	27.0 12.3
139.7 mm †	5.500 139.7	10.50 267	6.80 173	4.50 114	—	4.17 106	2.15 55	5.88 149	4.08 104	3.98 101	27.0 12.3
6 † 150	6.625 168.3	11.50 292	8.00 203	5.00 127	—	4.50 114	2.38 61	6.67 169	4.73 120	3.89 99	38.0 17.2
165.1 mm	6.500 165.1	11.50 292	8.00 203	5.00 127	—	4.50 114	2.38 61	6.67 169	4.73 120	3.89 99	38.0 17.2
8 † 200	8.625 219.1	14.00 356	9.88 251	6.06 154	5.05 128	5.65 144	2.15 55	8.85 225	5.65 144	5.75 146	64.0 29.0
10 250	10.750 273.0	17.00 432	12.00 305	7.09 180	5.96 151	6.69 170	2.15 55	10.92 277	6.73 171	—	100.0 45.4
12 300	12.750 323.9	19.50 495	14.00 356	8.06 205	6.91 176	7.64 194	2.51 64	12.81 925	7.73 196	—	140.0 63.5

† VdS Approved

JOB/OWNER

System No. _____

Location _____

CONTRACTOR

Submitted By _____

Date _____

ENGINEER

Spec Sect _____ Para _____

Approved _____

Date _____

WWW.VICTAULIC.COM

VICTAULIC IS A REGISTERED TRADEMARK OF VICTAULIC COMPANY. © 2007 VICTAULIC COMPANY. ALL RIGHTS RESERVED. PRINTED IN THE USA.

FireLock® Check Valves

SERIES 717

MATERIAL SPECIFICATIONS

Body: Ductile iron conforming to ASTM A-536, grade 65-45-12. Ductile iron conforming to ASTM A-395, grade 65-45-15, is available upon special request. 2½ – 3"/65 – 80mm sizes PPS coated. 4 – 12"/100 – 300mm sizes painted black enamel.

Body Seat: 2½ – 3"/65 – 80mm sizes PPS coated. 4 – 12"/100 – 300mm integrally welded on nickel alloy.

Disc Seal or Coating:

- **Grade "E" EPDM**
  EPDM (Green color code). Temperature range –30°F to +230°F/–34°C to +110°C. Recommended for cold and hot water service within the specified temperature range plus a variety of dilute acids, oil-free air and many chemical services. UL classified in accordance with ANSI/NSF 61 for cold +86°F/+30°C and hot +180°F/+82°C potable water service. NOT RECOMMENDED FOR PETROLEUM SERVICES.

* Services listed are General Service Recommendations only. It should be noted that there are services for which these gaskets are not recommended. Reference should always be made to the latest Victaulic Gasket Selection Guide for specific gasket service recommendations and for a listing of services which are not recommended.

Discs:

- 2½ – 3"/65 – 80mm Aluminum bronze conforming to ASTM B-148 with Grade "E" Seal.
- 4 – 12"/100 – 300mm ductile iron conforming to ASTM A-536, grade 65-45-12, fully encapsulated in Grade "E" elastomer.

Shaft: 2½ – 3"/65 – 80mm Type 416 stainless steel. 4 – 12"/100 – 300mm Type 316 stainless steel.

Spring: All sizes Type 302/304 stainless steel.

Shaft Plug: 2½ – 3"/65 – 80mm only; SAE Hex Socket Type conforming to ASTM A-576, cadmium plated to military specifications QQ-P-416A, class 3 type 2. 4 – 12"/100 – 300mm only; carbon steel zinc plated to ASTM B-633.

Pipe Plug: 4 – 12"/100 – 300mm only; carbon steel zinc plated to ASTM B-633.

VICTAULIC IS A REGISTERED TRADEMARK OF VICTAULIC COMPANY. © 2007 VICTAULIC COMPANY. ALL RIGHTS RESERVED. PRINTED IN THE USA.

FireLock® Check Valves

SERIES 717

FLOW CHARACTERISTICS

The chart below expresses the flow of water at 65°F/18°C through a full open valve.

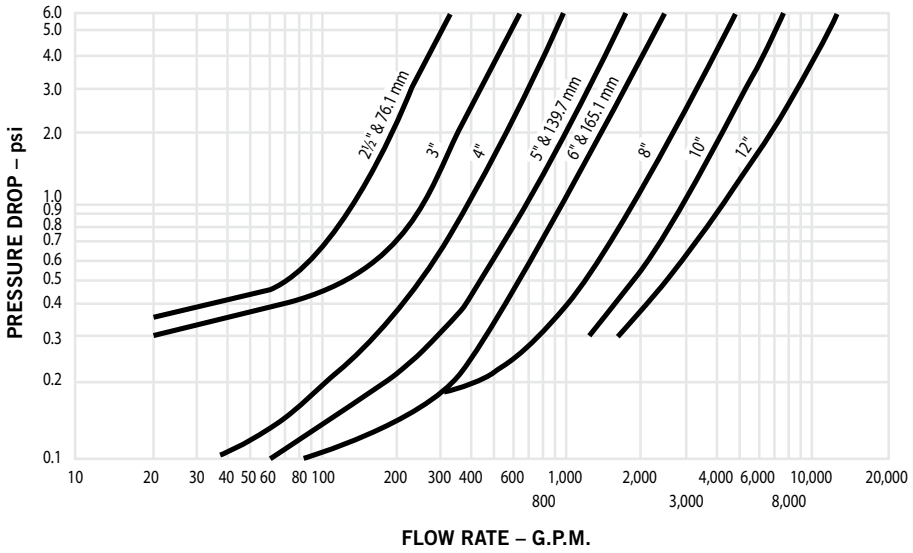

VICTAULIC IS A REGISTERED TRADEMARK OF VICTAULIC COMPANY. © 2007 VICTAULIC COMPANY. ALL RIGHTS RESERVED. PRINTED IN THE USA.

FireLock® Check Valves

SERIES 717

INSTALLATION

Reference should always be made to the I-100 Victaulic Field Installation Handbook for the product you are installing. Handbooks are included with each shipment of Victaulic products for complete installation and assembly data, and are available in PDF format on our website at www.victaulic.com.

WARRANTY

Refer to the Warranty section of the current Price List or contact Victaulic for details.

NOTE

This product shall be manufactured by Victaulic or to Victaulic specifications. All products to be installed in accordance with current Victaulic installation/assembly instructions. Victaulic reserves the right to change product specifications, designs and standard equipment without notice and without incurring obligations.

WCAS-77LKQ6

10.08 1479 REV H UPDATED 10/2007

VICTAULIC IS A REGISTERED TRADEMARK OF VICTAULIC COMPANY. © 2007 VICTAULIC COMPANY. ALL RIGHTS RESERVED. PRINTED IN THE USA.

FireLock® Butterfly Valve

MEA: 276-99-E CSFM: 7770-0531:113



SERIES 705W
WITH WEATHERPROOF ACTUATOR

The Series 705W butterfly valve features an approved weatherproof actuator housing approved for indoor or outdoor use. It has a ductile iron body and disc with EPDM disc coating. The body is coated with a heat fused polyphenylene sulfide blend to meet FM requirements. Designed for fire protection services only. Series 705W valve is UL Listed and FM Approved for 300 psi/2065 kPa service. Contact Victaulic for details of agency approvals.

WEATHERPROOF ACTUATOR

Supervisory switches that monitor the valve in the fully open position for valves are available 2½ – 12"/65 – 300 mm pre-wired (PW).

OPTIONAL SUPPLY-SIDE TAP

Series 705W valves are available with a ½" NPT supply side tap designed to allow direct water supply connection to Victaulic FireLock actuated fire protection valves. See separate drawings below. This is an optional feature and must be clearly noted on all orders.

MATERIAL SPECIFICATIONS

Body: Ductile iron conforming to ASTM A-536, coated with polyphenylene sulfide blend.

Disc: Ductile iron conforming to ASTM A-536, various grades, EPDM coated.

Disc Coating:

- **Grade "E" EPDM**
  EPDM (Green color code). Temperature range –30°F to +230°F/–34°C to +110°C. Recommended for cold and hot water service within the specified temperature range plus a variety of dilute acids, oil-free air and many chemical services. UL classified in accordance with ANSI/NSF 61 for cold +86°F/+30°C and hot +180°F/+82°C potable water service. NOT RECOMMENDED FOR PETROLEUM SERVICES.

Stem Bearings: Teflon impregnated fiberglass with stainless steel backing.

Stem Bearing Nuts: Type 416 Stainless Steel.

Tap Plug: Carbon steel, plated.

O-Ring: EPDM

Bracket: Carbon steel, painted.

Actuator:

- 2½ – 8"/65 – 200 mm: Bronze traveling nut on a steel lead screw, in a ductile iron housing.
- 10 – 12"/250 – 300 mm: Steel worm and cast iron quadrant gear, in a cast iron housing.

JOB/OWNER
System No. _____
Location _____

CONTRACTOR
Submitted By _____
Date _____

ENGINEER
Spec Sect _____ Para _____
Approved _____
Date _____

VICTAULIC IS A REGISTERED TRADEMARK OF VICTAULIC COMPANY. © 2006 VICTAULIC COMPANY. ALL RIGHTS RESERVED. PRINTED IN THE USA.

FireLock® Butterfly Valve

SERIES 705W
WITH WEATHERPROOF ACTUATOR

MATERIAL SPECIFICATIONS

Handwheel:

Size	Version	
Inches mm	cULus, LPCB, FM Black Inches mm	VdS * Red mm
2½ – 4 65 – 100	3.0 76.2	125
5 – 6 125 – 150	4.5 114.3	200
8 200	160 mm	250
10 – 12 250 – 300	9 225	

*VdS version not UL Listed, FM Approved or LPCB Approved.

VICTAULIC IS A REGISTERED TRADEMARK OF VICTAULIC COMPANY. © 2006 VICTAULIC COMPANY. ALL RIGHTS RESERVED. PRINTED IN THE USA..

FireLock® Butterfly Valve

SERIES 705W
WITH WEATHERPROOF ACTUATOR

DIMENSIONS – c UL us LISTED FM LPCB

Size		Dimensions – inches/millimeters								Aprx. Wgt. Each
Nominal Size inches mm	Actual Outside Diameter inches mm	End to End "A"	Hgt. "B"	"E"	"F"	"J"	"O"	"N" ‡	"P" ‡	lbs/kg
2½ 65	2.875 73.0	3.77 95.6	8.76 222.5	—	4.21 106.9	6.08 154.4	3.00 76.2	0.00 * 0.0 *	0.75 19.1	8.3 3.8
76.1 mm	3.000 76.1	3.77 95.6	8.76 222.5	—	4.21 106.9	6.08 154.4	3.00 76.2	0.00 * 0.0 *	0.75 19.1	8.3 3.8
3 80	3.500 88.9	3.77 95.6	9.40 238.8	0.08 2.0	4.21 106.9	6.08 154.4	3.00 76.2	0.00 * 0.0 *	0.75 19.1	8.9 4.0
4 100	4.500 114.3	4.63 117.6	10.84 275.3	0.07 1.8	6.01 152.7	6.98 177.3	3.00 76.2	0.73 18.5	1.13 28.7	14.9 6.8
139.7 mm	5.500 139.7	5.88 149.4	12.38 314.5	0.43 10.9	6.01 152.7	8.57 217.7	4.50 114.3	—	—	21.0 9.5
5 125	5.563 141.3	5.88 149.4	12.38 314.5	0.43 10.9	6.01 152.7	8.57 217.7	4.50 114.3	—	—	21.0 9.5
165.1 mm	6.500 165.1	5.88 149.4	13.41 340.6	1.00 25.4	7.51 190.8	9.32 236.7	4.50 114.3	1.60 40.6	1.88 47.8	26.5 12.0
6 150	6.625 168.3	5.88 149.4	13.41 340.6	1.00 25.4	7.51 190.8	9.32 236.7	4.50 114.3	1.60 40.6	1.88 47.8	26.5 12.0
8 200	8.625 219.1	5.33 135.4	16.50 419.1	1.27 32.3	9.65 245.1	10.98 278.9	6.30 160.0	0.00 * 0.0 *	0.68 17.3	43.0 19.5
10 250	10.750 273.0	6.40 162.6	19.14 486.2	1.72 43.7	12.20 309.9	16.19 411.2	9.00 228.6	—	—	80.0 36.3
12 300	12.750 323.9	6.50 165.1	21.54 547.1	2.66 67.6	14.25 362.0	17.22 437.4	9.00 228.6	—	—	102.0 46.3

* On Centerline

‡ These dimensions apply only to a Series 705W Butterfly Valve with a ½-inch NPT, supply-side tap

1. To prevent rotation of valves. it is recommended that Series 705W be installed with Victaulic Style 07 Zero-Flex®, Style 005 FireLock, Style 009/009V FireLock EZ, or Style HP-70 Rigid Couplings. If Victaulic flexible couplings are used. additional support may be required.
2. Valve must not be installed with disc in full open position. Disc must be partly closed so that no part is protruding beyond end of valve body.
3. Victaulic grooved end butterfly valves are permitted for use with grooved end pipe (IPS) only. Not permitted for use with plain end (IPS) pipe.
4. Series 705W valves are designed for ambient weather conditions as opposed to submersible service.

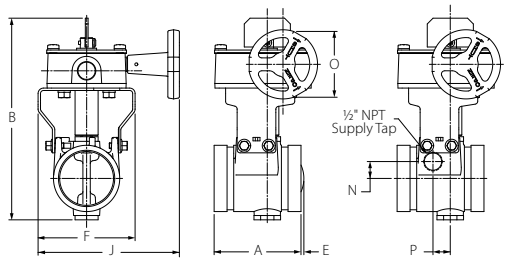

2½ – 4-INCH/65 – 100-MM SIZES

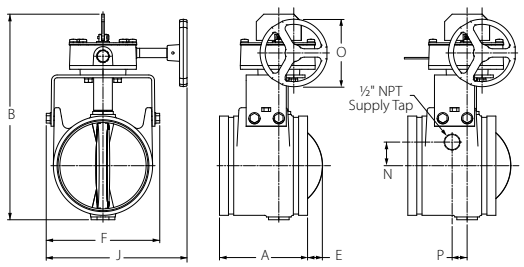

5 – 12-INCH/125 – 300-MM SIZES

VICTAULIC IS A REGISTERED TRADEMARK OF VICTAULIC COMPANY. © 2006 VICTAULIC COMPANY. ALL RIGHTS RESERVED. PRINTED IN THE USA.

FireLock® Butterfly Valve

SERIES 705W
WITH WEATHERPROOF ACTUATOR

DIMENSIONS –

Size		Dimensions – inches/millimeters								Aprx. Wgt. Each
Nominal Size inches mm	Actual Outside Diameter inches mm	End to End "A"	Hgt. "B"	"E"	"F"	"J"	"O"	"N" ‡	"P" ‡	lbs/kg
2½ 65	2.875 73.0	3.77 95.6	8.76 222.5	—	4.21 106.9	6.08 154.4	4.92 125	0.00 * 0.0 *	0.75 19.1	8.3 3.8
76.1 mm	3.000 76.1	3.77 95.6	8.76 222.5	—	4.21 106.9	6.08 154.4	4.92 125	0.00 * 0.0 *	0.75 19.1	8.3 3.8
3 80	3.500 88.9	3.77 95.6	9.40 238.8	0.08 2.0	4.21 106.9	6.08 154.4	4.92 125	0.00 * 0.0 *	0.75 19.1	8.9 4.0
4 100	4.500 114.3	4.63 117.6	10.84 275.3	0.07 1.8	6.01 152.7	6.98 177.3	4.92 125	0.73 18.5	1.13 28.7	14.9 6.8
139.7 mm	5.500 139.7	5.88 149.4	12.38 314.5	0.43 10.9	6.01 152.7	8.57 217.7	7.87 200	—	—	21.0 9.5
5 125	5.563 141.3	5.88 149.4	12.38 314.5	0.43 10.9	6.01 152.7	8.57 217.7	7.87 200	—	—	21.0 9.5
165.1 mm	6.500 165.1	5.88 149.4	13.41 340.6	1.00 25.4	7.51 190.8	9.32 236.7	7.87 200	1.60 40.6	1.88 47.8	26.5 12.0
6 150	6.625 168.3	5.88 149.4	13.41 340.6	1.00 25.4	7.51 190.8	9.32 236.7	7.87 200	1.60 40.6	1.88 47.8	26.5 12.0
8 200	8.625 219.1	5.33 135.4	16.50 419.1	1.27 32.3	9.65 245.1	10.98 278.9	9.84 250	0.00 * 0.0 *	0.68 17.3	43.0 19.5
10 250	10.750 273.0	6.40 162.6	19.14 486.2	1.72 43.7	12.20 309.9	16.19 411.2	9.84 250	—	—	80.0 36.3
12 300	12.750 323.9	6.50 165.1	21.54 547.1	2.66 67.6	14.25 362.0	17.22 437.4	9.84 250	—	—	102.0 46.3

* On Centerline

‡ These dimensions apply only to a Series 705W Butterfly Valve with a ½-inch NPT, supply-side tap

1. To prevent rotation of valves. it is recommended that Series 705W be installed with Victaulic Style 07 Zero-Flex®. Style 005 FireLock, Style 009/009V FireLock EZ, or Style HP-70 Rigid Couplings. If Victaulic flexible couplings are used. additional support may be required.
2. Valve must not be installed with disc in full open position. Disc must be partly closed so that no part is protruding beyond end of valve body.
3. Victaulic grooved end butterfly valves are permitted for use with grooved end pipe (IPS) only. Not permitted for use with plain end (IPS) pipe.
4. Series 705W valves are designed for ambient weather conditions as opposed to submersible service.

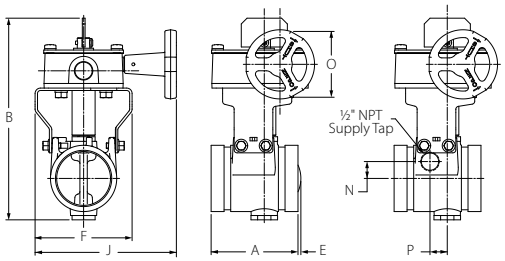

2½ – 4-INCH/65 – 100-MM SIZES

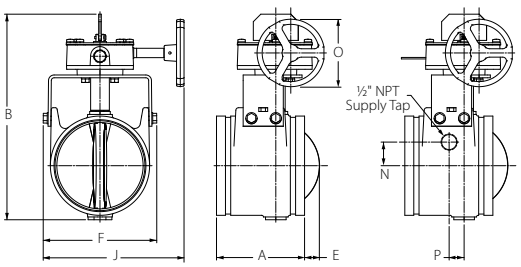

5 – 12-INCH/125 – 300-MM SIZES

VICTAULIC IS A REGISTERED TRADEMARK OF VICTAULIC COMPANY. © 2006 VICTAULIC COMPANY. ALL RIGHTS RESERVED. PRINTED IN THE USA..

FireLock® Butterfly Valve

SERIES 705W
WITH WEATHERPROOF ACTUATOR

PERFORMANCE

The chart expresses the frictional resistance of Victaulic Series 705W in equivalent feet/meters of straight pipe.

Size			Size		
Nominal Size Inches mm	Actual Outside Diameter Inches mm	Equiv. Feet/m of Pipe	Nominal Size Inches mm	Actual Outside Diameter Inches mm	Equiv. Feet/m of Pipe
2½ 65	2.875 73.0	5 1.6	165.1 mm	6.500 165.1	8 2.5
76.1 mm	3.000 76.1	5 1.6	6 150	6.625 168.3	8 2.5
3 80	3.500 88.9	5 1.6	8 200	8.625 219.1	11 3.4
4 100	4.500 114.3	12 3.7	10 250	10.750 273.0	12 3.7
139.7 mm	5.500 139.7	12 3.7	12 300	12.750 323.9	14 4.3
5 125	5.563 141.3	12 3.7			

MAXIMUM WORKINGS PRESSURE RATINGS

Size		Maximum Working Pressure by Agency			
Nominal Size Inches mm	Actual Outside Diameter Inches mm	cULus PSI	FM PSI	LPCB BAR	Vos BAR
2½ 65	2.875 73.0	300	300	20	16
76.1 mm	3.000 76.1	300	300	20	16
3 80	3.500 88.9	300	300	20	16
4 100	4.500 114.3	300	300	20	16
139.7 mm	5.500 139.7	300	300	20	16
5 125	5.563 141.3	300	300	20	16
165.1	6.500 165.1	300	300	20	16
6 150	6.625 168.3	300	300	20	16
8 200	8.625 219.1	300	300	20	16
10 250	10.750 273.0	300	300	20	16
12 300	12.750 323.9	300	300	20	16

VICTAULIC IS A REGISTERED TRADEMARK OF VICTAULIC COMPANY. © 2006 VICTAULIC COMPANY. ALL RIGHTS RESERVED. PRINTED IN THE USA.

FireLock® Butterfly Valve

SERIES 705W
WITH WEATHERPROOF ACTUATOR

PERFORMANCE

C_V values for flow of water at +60°F/+16°C with a fully open valve are shown in the table below. For additional details, contact Victaulic.

Formulas for C_V Values:

$$\Delta P = \frac{Q^2}{C_v^2}$$

$$Q = C_v \times \sqrt{\Delta P}$$

Where:
Q = Flow (GPM)
ΔP = Pressure Drop (psi)
C_v = Flow Coefficient

Size		C_V	Size		C_V	Size		C_V
Nominal Size Inches mm	Actual Outside Diameter Inches mm	(Full Open)	Nominal Size Inches mm	Actual Outside Diameter Inches mm	(Full Open)	Nominal Size Inches mm	Actual Outside Diameter Inches mm	(Full Open)
2½ 65	2.875 73.0	325	139.7 mm	5.500 139.7	1150	8 200	8.625 219.1	3400
76.1 mm	3.000 76.1	325	5 125	5.563 141.3	1150	10 250	10.750 273.0	5750
3 80	3.500 88.9	482	165.1 mm	6.500 165.1	1850	12 300	12.750 323.9	8300
4 100	4.500 114.3	600	6 150	6.625 168.3	1850			

Formulas for K_V Values:

$$\Delta P = \frac{Q^2}{K_v}$$

$$Q = K_v \times \sqrt{\Delta P}$$

Where:
Q = Flow $\left(\frac{m^3}{hr.}\right)$
ΔP = Pressure (bar)
K_v = Flow Factor

Size		K_V	Size		K_V	Size		K_V
Nominal Size Inches mm	Actual Outside Diameter Inches mm	(Full Open)	Nominal Size Inches mm	Actual Outside Diameter Inches mm	(Full Open)	Nominal Size Inches mm	Actual Outside Diameter Inches mm	(Full Open)
2½ 65	2.875 73.0	280	139.7 mm	5.500 139.7	995	8 200	8.625 219.1	2940
76.1 mm	3.000 76.1	280	5 125	5.563 141.3	995	10 250	10.750 273.0	4975
3 80	3.500 88.9	415	165.1 mm	6.500 165.1	1600	12 300	12.750 323.9	7180
4 100	4.500 114.3	520	6 150	6.625 168.3	1600			

VICTAULIC IS A REGISTERED TRADEMARK OF VICTAULIC COMPANY. © 2006 VICTAULIC COMPANY. ALL RIGHTS RESERVED. PRINTED IN THE USA..

FireLock® Butterfly Valve

SERIES 705W
WITH WEATHERPROOF ACTUATOR

SWITCH AND WIRING

1. The supervisory switch contains two, single pole, double throw, pre-wired switches.
2. Switches are rated:

   10 amps @ 125 or 250 VAC/60 Hz

   0.50 amps @ 125 VDC

   0.25 amps @ 250 VDC
3. Switches supervise the valve in the “open” position.
4. One switch has two #18 MTW wires per terminal, which permit complete supervision of leads (refer to diagrams and notes below). The second switch has one #18 MTW wire per terminal. This double circuit provides flexibility to operate two electrical devices at separate locations, such as an indicating light and an audible alarm, in the area that the valve is installed.
5. A #14 MTW ground lead (green) is provided.

   Switch #1 = S1 For connection to the supervisory circuit of a UL Listed alarm control panel

   Switch #2 = S2 Auxiliary switch that may be connected to auxiliary devices, per the authority having jurisdiction

S1
- Normally Closed: (2) Blue
- Common: (2) Yellow

S2
- Normally Closed: Blue with Orange Stripe
- Normally Open: Brown with Orange Stripe
- Common: Yellow with Orange Stripe

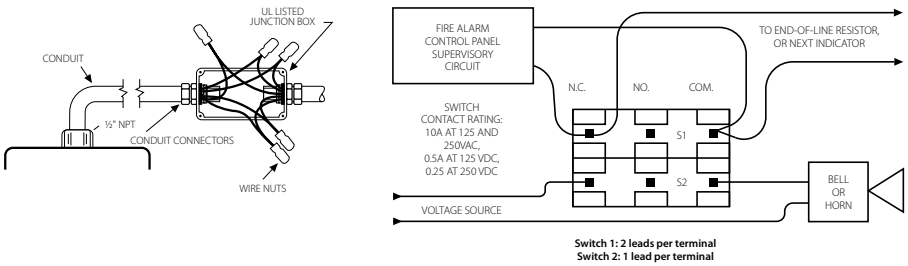

NOTE: The above diagram shows a connection between the common terminal (yellow – S1 and yellow-with-orange stripe – S2) and the normally closed terminal (blue – S1 and blue-with-orange stripe – S2). In this example, the indicator light and alarm will stay on until the valve is fully open. When the valve is fully open, the indicator light and alarm will go out. Cap off any unused wires (e.g. brown with orange stripe).

Only S1 (two leads per terminal) may be connected to the fire alarm control panel.

The connection of the alarm switch wiring shall be in accordance with NFPA 72 and the auxiliary switch per NFPA 70 (NEC).

VICTAULIC IS A REGISTERED TRADEMARK OF VICTAULIC COMPANY. © 2006 VICTAULIC COMPANY. ALL RIGHTS RESERVED. PRINTED IN THE USA.

FireLock® Butterfly Valve

SERIES 705W
WITH WEATHERPROOF ACTUATOR

WARRANTY

Refer to the Warranty section of the current Price List or contact Victaulic for details.

NOTE

This product shall be manufactured by Victaulic or to Victaulic specifications. All products to be installed in accordance with current Victaulic installation/assembly instructions. Victaulic reserves the right to change product specifications. designs and standard equipment without notice and without incurring obligations.

INSTALLATION

Reference should always be made to the installation sheet included with the valve. Verify you have the latest revision by visiting our website at www.victaulic.com. Further reference can be found in the I-100 Victaulic Field Installation Handbook.

WCAS-6ZAQT8

10.18 2466 REV G UPDATED 7/2007

VICTAULIC IS A REGISTERED TRADEMARK OF VICTAULIC COMPANY. © 2006 VICTAULIC COMPANY. ALL RIGHTS RESERVED. PRINTED IN THE USA.

FireLock® Butterfly Valve - Supervised CLOSED

SERIES 707C
WITH WEATHERPROOF ACTUATOR



The Series 707C butterfly valve features a weatherproof actuator housing approved for indoor or outdoor use. It has been developed for fire pump metering test lines, per NFPA 20 and rooftop test units, as well as pressure reducing valve by-pass lines per NFPA 14. The Series 707C has a ductile iron body and disc with EPDM disc coating. Designed for fire protection services only. Contact Victaulic for details of agency approvals.

The Series 707C Butterfly Valve is designed to be SUPERVISED CLOSED. Under normal operating conditions, this valve will be CLOSED, and the internal limit switches will supervise the valve only in the CLOSED position. The valve will be in the open position only during system testing and maintenance. This supervised closed Series 707C Butterfly Valve should NOT be installed where fluid flow is required as part of normal system operation.

APPROVALS AND LISTINGS

	Approval/Listing Service Pressures Series 707C Butterfly Valve		
	cULus	FM	VdS
2"/50mm	up to 300psi/2068kPa	n/a	up to 300psi/2068kPa
2 1/2"/65mm	up to 300psi/2068kPa	up to 300psi/2068kPa	n/a
76.1mm	up to 300psi/2068kPa	up to 300psi/2068kPa	up to 300psi/2068kPa
3"/80mm	up to 300psi/2068kPa	up to 300psi/2068kPa	up to 300psi/2068kPa
108mm	up to 300psi/2068kPa	n/a	n/a
4"/100mm	up to 300psi/2068kPa	up to 300psi/2068kPa	up to 300psi/2068kPa
133mm	up to 300psi/2068kPa	n/a	n/a
5"/125mm	up to 300psi/2068kPa	up to 300psi/2068kPa	up to 300psi/2068kPa
139.7mm	up to 300psi/2068kPa	up to 300psi/2068kPa	n/a
6"/150mm	up to 300psi/2068kPa	up to 300psi/2068kPa	up to 300psi/2068kPa
159mm	up to 300psi/2068kPa	n/a	n/a
165.1mm	up to 300psi/2068kPa	up to 300psi/2068kPa	n/a
8"/200mm	up to 300psi/2068kPa	up to 300psi/2068kPa	up to 300psi/2068kPa

JOB/OWNER
System No. _____
Location _____

CONTRACTOR
Submitted By _____
Date _____

ENGINEER
Spec Sect _____ Para _____
Approved _____
Date _____

VICTAULIC IS A REGISTERED TRADEMARK OF VICTAULIC COMPANY. © 2013 VICTAULIC COMPANY. ALL RIGHTS RESERVED

FireLock® Butterfly Valve - Supervised CLOSED

SERIES 707C
WITH WEATHERPROOF ACTUATOR

MATERIAL SPECIFICATIONS

Body: Ductile iron conforming to ASTM A-536, grade 65-45-12

End Face, 2 – 6"/50 – 150 mm: Ductile iron conforming to ASTM A-536, grade 65-45-12

Seal Retainer, 8"/200 mm: Ductile iron conforming to ASTM A-536, grade 65-45-12

Coating: Black alkyd enamel

Disc: Ductile iron conforming to ASTM A-536, grade 65-45-12, with electroless nickel coating conforming to ASTM B-733

Seat:

- **Grade "E" EPDM**

Stems: 416 stainless steel conforming to ASTM A-582

Stem Seal Cartridge: C36000 brass

Bearings: Stainless Steel with TFE lining

Stem Seals: EPDM

Stem Retaining Ring: Carbon steel

Actuator:

- 2 - 8"/50 - 200mm: Brass or bronze traveling nut on a steel lead screw, in a ductile iron housing

VICTAULIC IS A REGISTERED TRADEMARK OF VICTAULIC COMPANY. © 2013 VICTAULIC COMPANY. ALL RIGHTS RESERVED

FireLock® Butterfly Valve - Supervised CLOSED

SERIES 707C
WITH WEATHERPROOF ACTUATOR

DIMENSIONS –

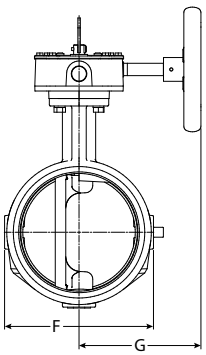

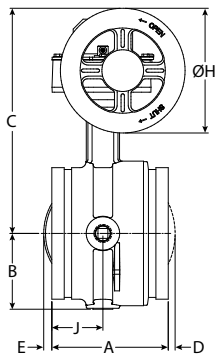

Size		Dimensions – Inches/millimeters								
Size	Outside Diameter	End to End A	B	C	D	E	F	G	DIA H	J
2" 60.3 mm	2.375 60.3	4.25 108.0	2.28 57.9	6.41 162.8	—	—	4.00 101.6	4.22 107.2	4.50 114.3	2.12 53.8
2½" 73 mm	2.875 73.0	3.77 95.8	2.28 57.9	7.54 191.5	—	—	4.00 101.6	4.22 107.2	4.50 114.3	1.77 45.0
76.1 mm	3.000 76.1	3.77 95.8	2.28 57.9	7.54 191.5	—	—	4.00 101.6	4.22 107.2	4.50 114.3	1.77 45.0
3" 88.9 mm	3.500 88.9	3.77 95.8	2.53 64.3	7.79 197.9	—	—	4.50 114.3	4.22 107.2	4.50 114.3	1.77 45.0
108 mm	4.250 108.0	4.63 117.6	2.88 73.2	8.81 223.8	—	—	5.50 139.7	4.22 107.2	4.50 114.3	2.20 55.9
4" 114.3 mm	4.500 114.3	4.63 117.6	2.88 73.2	8.81 223.8	—	—	5.50 139.7	4.22 107.2	4.50 114.3	2.20 55.9
133 mm	5.250 133.0	5.88 149.4	3.35 85.1	10.88 276.4	—	—	6.56 166.6	6.19 157.2	6.30 160.0	2.58 65.5
139.7 mm	5.500 139.7	5.88 149.4	3.35 85.1	10.88 276.4	—	—	6.56 166.6	6.19 157.2	6.30 160.0	2.58 65.6
5" 141.3 mm	5.563 141.3	5.88 149.4	3.35 85.1	10.88 276.4	—	—	6.56 166.6	6.19 157.2	6.30 160.0	2.58 65.5
159 mm	6.250 159.0	5.88 149.4	3.84 97.5	11.38 289.1	—	0.41 10.4	7.52 191.0	6.19 157.2	6.30 160.0	2.58 65.5
165.1 mm	6.500 165.1	5.88 149.4	3.84 97.5	11.38 289.1	—	0.41 10.4	7.52 191.0	6.19 157.2	6.30 160.0	2.58 65.5
6" 168.3	6.625 168.3	5.88 149.4	3.84 97.5	11.38 289.1	—	0.41 10.4	7.52 191.0	6.19 157.2	6.30 160.0	1.90 48.3
8" 219.1 mm	8.625 219.1	5.33 135.4	5.07 128.8	13.53 343.6	0.80 20.3	1.47 37.3	10.00 254.0	6.19 157.2	8.10 205.7	2.33 59.2

VICTAULIC IS A REGISTERED TRADEMARK OF VICTAULIC COMPANY. © 2013 VICTAULIC COMPANY. ALL RIGHTS RESERVED

FireLock® Butterfly Valve - Supervised CLOSED

SERIES 707C
WITH WEATHERPROOF ACTUATOR

PERFORMANCE

The chart expresses the frictional resistance of Victaulic Series 707C Supervised CLOSED Butterfly Valve in equivalent feet/meters of straight pipe.

Size			Size		
Nominal Size Inches mm	Actual Outside Diameter Inches mm	Equiv. Feet/m of Pipe	Nominal Size Inches mm	Actual Outside Diameter Inches mm	Equiv. Feet/m of Pipe
2 50	2.375 60.3	6 1.8	6 150	6.625 168.3	14 4.2
2½ 65	2.875 73.0	6 1.8	159 mm	159 mm	14 4.3
76.1 mm	3.000 76.1	6 1.8	165.1 mm	6.500 165.1	14 4.2
3 80	3.500 88.9	7 2.1	8 200	8.625 219.1	16 4.9
4 100	4.500 114.3	8 2.4			
108 mm	108 mm	8 2.4			
5 125	5.563 141.3	12 3.7			
133 mm	133 mm	12 3.7			
139.7 mm	5.500 139.7	12 3.7			

VICTAULIC IS A REGISTERED TRADEMARK OF VICTAULIC COMPANY. © 2013 VICTAULIC COMPANY. ALL RIGHTS RESERVED

FireLock® Butterfly Valve - Supervised CLOSED

SERIES 707C
WITH WEATHERPROOF ACTUATOR

PERFORMANCE

C_V values for flow of water at +60°F/+16°C with a fully open valve are shown in the table below. For additional details, contact Victaulic.

Formulas for C_V Values:

$$\Delta P = \frac{Q^2}{C_v^2}$$

$$Q = C_v \times \sqrt{\Delta P}$$

Where:
Q = Flow (GPM)
ΔP = Pressure Drop (psi)
C_v = Flow Coefficient

Size		C_V	Size		C_V	Size		C_V
Nominal Size Inches mm	Actual Outside Diameter Inches mm	(Full Open)	Nominal Size Inches mm	Actual Outside Diameter Inches mm	(Full Open)	Nominal Size Inches mm	Actual Outside Diameter Inches mm	(Full Open)
2	2.375 60.3	170	5 125	5.563 141.3	1200	8 200	8.625 219.1	3400
2½ 65	2.875 73.0	260	133 mm	133 mm	1200			
76.1 mm	3.000 76.1	260	139.7 mm	5.500 139.7	1200			
3 80	3.500 88.9	440	6 150	6.625 168.3	1800			
4 100	4.500 114.3	820	159 mm	159 mm	1800			
108 mm	108 mm	820	165.1 mm	6.500 165.1	1800			

Formulas for K_V Values:

$$\Delta P = \frac{Q^2}{K_v}$$

$$Q = K_v \times \sqrt{\Delta P}$$

Where:
Q = Flow $\left(\frac{m^3}{hr.}\right)$
ΔP = Pressure (bar)
K_v = Flow Factor

Size		K_V	Size		K_V	Size		K_V
Nominal Size Inches mm	Actual Outside Diameter Inches mm	(Full Open)	Nominal Size Inches mm	Actual Outside Diameter Inches mm	(Full Open)	Nominal Size Inches mm	Actual Outside Diameter Inches mm	(Full Open)
2	2.375 60.3	147	5 125	5.563 141.3	1040	8 200	8.625 219.1	2940
2½ 65	2.875 73.0	225	133 mm	133 mm	1040			
76.1 mm	3.000 76.1	225	139.7 mm	5.500 139.7	1040			
3 80	3.500 88.9	380	6 150	6.625 168.3	1560			
4 100	4.500 114.3	710	159 mm	159 mm	1560			
108 mm	108 mm	710	165.1 mm	6.500 165.1	1560			

VICTAULIC IS A REGISTERED TRADEMARK OF VICTAULIC COMPANY. © 2013 VICTAULIC COMPANY. ALL RIGHTS RESERVED

FireLock® Butterfly Valve - Supervised CLOSED

SERIES 707C
WITH WEATHERPROOF ACTUATOR

SWITCH AND WIRING

1. The supervisory switch contains two, single pole, double throw, pre-wired switches.
2. Switches are rated:

   10 amps @ 125 or 250 VAC/60 Hz

   0.50 amps @ 125 VDC

   0.25 amps @ 250 VDC

3. **Switches supervise the valve in the "CLOSED" position.**
4. One switch has two #18 insulated wires per terminal, which permit complete supervision of leads (refer to diagrams and notes below). The second switch has one #18 insulated wire per terminal. This double circuit provides flexibility to operate two electrical devices at separate locations, such as an indicating light and an audible alarm, in the area that the valve is installed.
5. A #14 insulated ground lead (green) is provided.

   Switch #1 = S1 For connection to the supervisory circuit of a UL Listed alarm control panel

   Switch #2 = S2 Auxiliary switch that may be connected to auxiliary devices, per the authority having jurisdiction

S1
- Normally Closed: (2) Blue
- Common: (2) Yellow

S2
- Normally Closed: Blue with Orange Stripe
- Normally Open: Brown with Orange Stripe
- Common: Yellow with Orange Stripe

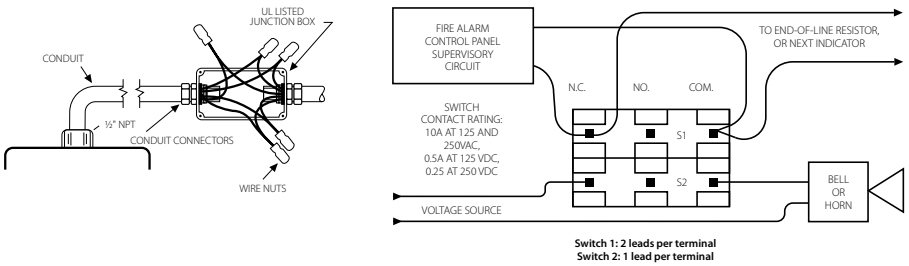

NOTE: The above diagram shows a connection between the common terminal (yellow – S1 and yellow-with-orange stripe – S2) and the normally closed terminal (blue – S1 and blue-with-orange stripe – S2). In this example, the indicator light and alarm will stay on until the valve is fully **CLOSED**. When the valve is fully **CLOSED**, the indicator light and alarm will go out. Cap off any unused wires (e.g. brown with orange stripe).

Only S1 (two leads per terminal) may be connected to the fire alarm control panel.

The connection of the alarm switch wiring shall be in accordance with NFPA 72 and the auxiliary switch per NFPA 70 (NEC).

VICTAULIC IS A REGISTERED TRADEMARK OF VICTAULIC COMPANY. © 2013 VICTAULIC COMPANY. ALL RIGHTS RESERVED

FireLock® Butterfly Valve - Supervised CLOSED

SERIES 707C
WITH WEATHERPROOF ACTUATOR

WARRANTY

Refer to the Warranty section of the current Price List or contact Victaulic for details.

NOTE

This product shall be manufactured by Victaulic or to Victaulic specifications. All products to be installed in accordance with current Victaulic installation/assembly instructions. Victaulic reserves the right to change product specifications. designs and standard equipment without notice and without incurring obligations.

INSTALLATION

Reference should always be made to the installation sheet included with the valve. Verify you have the latest revision by visiting our website at www.victaulic.com. Further reference can be found in the I-100 Victaulic Field Installation Handbook.

VICTAULIC IS A REGISTERED TRADEMARK OF VICTAULIC COMPANY. © 2013 VICTAULIC COMPANY. ALL RIGHTS RESERVED

POTTER
The Symbol of Protection

OSYSU Series

Outside Screw and Yoke Valve Supervisory Switch

Features

- NEMA 4X* (IP 65) and 6P (IP 67)

  **Enclosure is 4X. For additional corrosion protection of mounting hardware, use model OSYSU-2 CRH*
- -40º to 140º (-40ºC to 60ºC) operating temperature range
- Visual switch indicators
- Two conduit entrances
- Adjustable length trip rod
- Accomodates up to 12AWG wire
- Three position switch detects tampering and valve closure
- Knurled mounting bracket prevents slipping
- Fine adjustment feature for fast, easy installation
- RoHS compliant
- One or two SPDT contact models (-1,-2)



NOTICE

Before any work is done on the fire sprinkler or fire alarm system, the building owner or their authorized representative shall be notified. Before opening any closed valve, ensure that opening the valve will not cause any damage from water flow due to open or missing sprinklers, piping, etc.

SIGNALING c UL us LISTED

FM APPROVED

CE

Important: This document contains important information on the installation and operation of OS&Y valve supervisory switches. Please read all instructions carefully before beginning installation. A copy of this document is required by NFPA 72 to be maintained on site.

Description

The OSYSU is used to monitor the open position of an OS&Y (outside screw and yoke) type gate valve. This device is available in two models; the OSYSU-1, containing one set of SPDT (Form C) contacts and the OSYSU-2, containing two sets of SPDT (Form C) contacts. These switches mount conveniently to most OS&Y valves ranging in size from 2" to 12" (50mm to 300mm). They will mount on some valves as small as ½" (12,5mm).
The cover is held in place by two tamper resistant screws that require a special tool to remove. The tool is furnished with each device.

Testing

The operation of the OSYSU and its associated protective monitoring system shall be inspected, tested, and maintained in accordance with all applicable local and national codes and standards and/or the Authority Having Jurisdiction (manufacturer recommends quarterly or more frequently). A minimum test shall consist of turning the valve wheel towards the closed position. The OSYSU shall operate within the first two revolutions of the wheel. Fully close the valve and ensure that the OSYSU does not restore. Fully open the valve and ensure that the OSYSU restores to normal only when the valve is fully opened.

⚠ CAUTION

Close the valve fully to determine that the stem threads do not activate the switch. The switch being activated by the stem threads could result in a ***false valve open*** indication.

Technical Specifications

Dimensions	See Fig 8
Weight	1.6 lbs (0,73 kg)
Enclosure	Cover: Die Cast Finish: Red Powder Coat Base: Die Cast Finish: Black Powder Coat All parts have corrosion resistant finishes
Cover Tamper	Tamper Resistant Screws Optional Cover Tamper Switch Available
Contact Ratings	OSYSU-1: One Set of SPDT (Form C) OSYSU-2: Two Sets of SPDT (Form C) 10.0 Amps at 125/250 VAC 2.0 Amps at 30VDC Resistive 10 mAmps minimum at 24 VDC
Environmental Limitations	-40º F to 140ºF (-40ºC to 60ºC) NEMA 4X (IP 65) and NEMA 6P (IP 67) Enclosure (Use suitably rated conduit and connector) Indoor or Outdoor Use (See OSYSU-EX Bulletin 5400705 for Hazardous locations)
Conduit Entrances	Two Knockouts for 1/2" conduit provided (See Notice on Page 6 and Fig. 9 on Page 5)
Service Use	NFPA 13, 13D, 13R, 72

Specifications subject to change without notice

Theory of Operation

The OSYSU is a 3 position switch. The center position is the normal installation position. Normal is when the switch is installed on the OS&Y valve, the valve is fully open and the trip rod of the OSYSU is in the groove of the valve stem. Closing the valve causes the trip rod to ride up out of the groove and activates the switches. Removing the OSYSU from the valve causes the spring to pull the trip rod in the other direction and activates the switches.

Visual Switch Status Indication

There are 3 visual indicators to determine the status of the switches.

Fig 1; the actuator button of the micro switches are on the raised section of the switch actuator.

Fig 2; the trip rod is perpendicular to the base and lined up with the alignment mark on the mounting bracket.

Fig 3; the white visual indicator is visible through the window on the back of the switch actuator.

A final test is to meter the contacts marked COM and N.O. to ensure they are an open circuit when the valve is open and that they close and have continuity within 2 revolutions of turning the valve handwheel towards the closed position and the contacts remain closed as the valve is completely closed and until the valve is completely opened when the trip rod drops back into the groove in the valve stem.

Fig 1

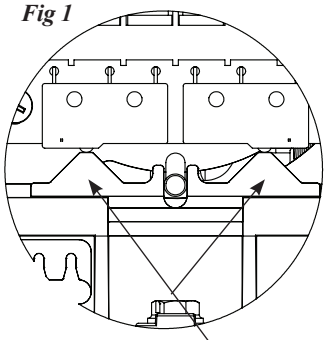

Fig 2

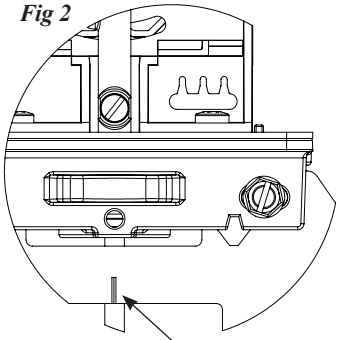

Fig 3

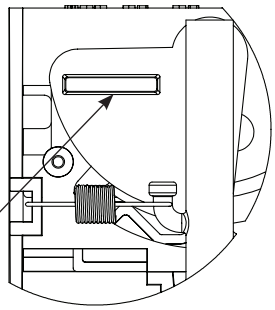

Fig 4

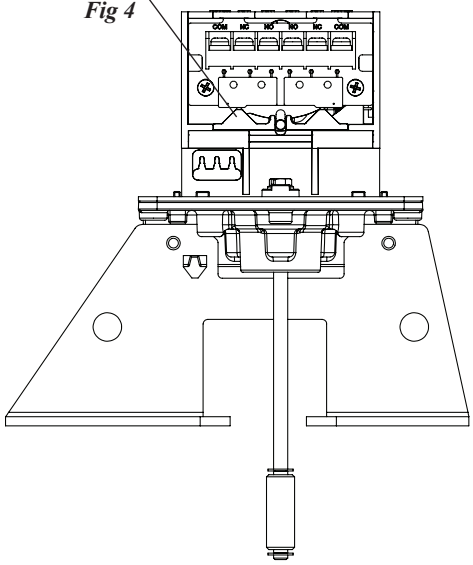

Fig 5

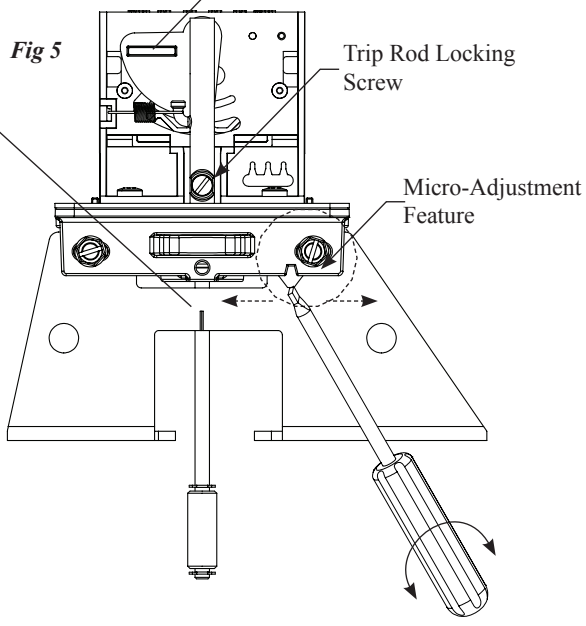

Fig 6

Small Valve Installation - 1/2” Through 2 1/2” Sizes

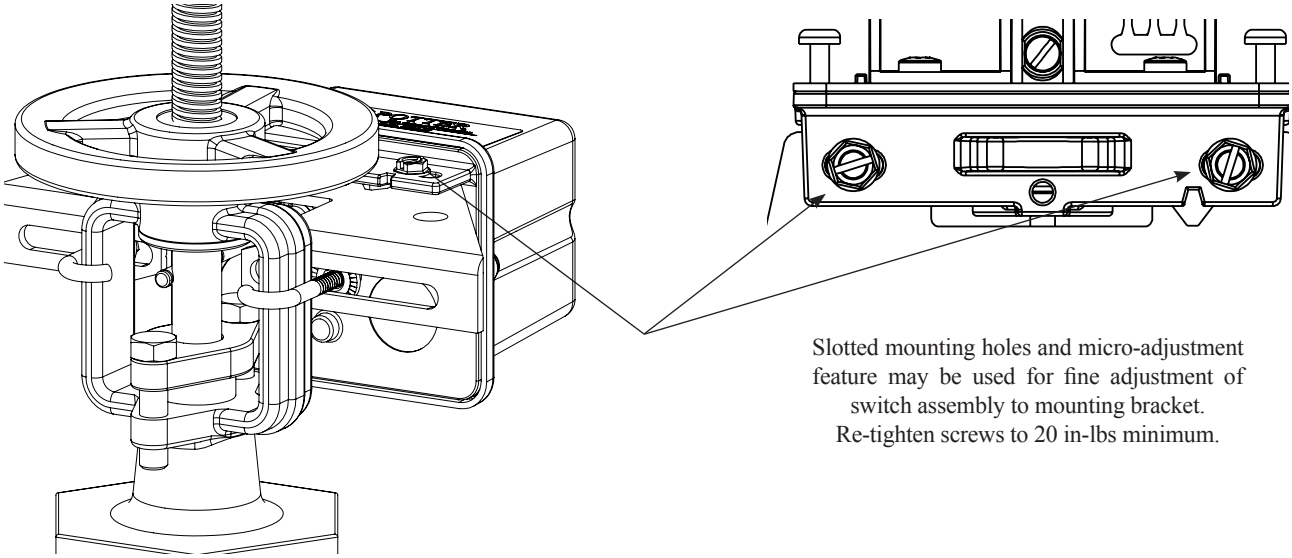

Slotted mounting holes and micro-adjustment feature may be used for fine adjustment of switch assembly to mounting bracket. Re-tighten screws to 20 in-lbs minimum.

Small Valve Installation

NOTE: If the valve stem is pre-grooved at 1/8” minimum depth; proceed to step 7.

1. Remove and discard "E" ring and roller from the trip rod.
2. With the valve in the FULL OPEN position, locate the OSYSU across the valve yoke as far as possible from the valve gland so that the spring loaded trip rod of the OSYSU is pulled against the non threaded portion of the valve stem. Position the OSYSU with the bracket near the handwheel as shown in Fig. 6 if possible to avoid creating a pinch point between the wheel and the OSYSU.
3. Loosen the locking screw that holds the trip rod in place and adjust the rod length (see Fig. 5). When adjusted properly, the rod should extend past the valve screw, but not so far that it contacts the clamp bar. Tighten the locking screw to 5 in-lbs minimum to hold the trip rod in place and properly seal the enclosure.

   NOTE: If trip rod length is excessive, loosen the locking screw and remove the trip rod from the trip lever. Using pliers, break off the one (1) inch long notched section (see Fig. 10). Reinstall trip rod and repeat Step 3 procedure.
4. Mount the OSYSU loosely with the carriage bolts and clamp bar supplied. On valves with limited clearance use J-hooks supplied instead of the carriage bolts and clamp bar to mount the OSYSU.
5. Mark the valve stem at the center of the trip rod.
6. Remove the OSYSU. Utilizing a 3/16” or 1/4” diameter straight file, file a 1/8” minimum depth groove centered on the mark on the valve stem. Deburr and smooth the edges of the groove to prevent damage to the valve packing and to allow the trip rod to move easily in and out of the groove as the valve is operated.

   NOTE: A groove depth of up to approximately 3/16” can make it easier to install the OSYSU so that it does not restore as it rolls over by the threads of the valve stem.
7. Mount the OSYSU on the valve yoke with the spring loaded trip rod of the OSYSU pulled against the valve stem and centered in the groove of the stem. If possible, position the OSYSU with the flat side of the bracket toward the hand wheel, as shown in Fig. 6, to help avoid creating a pinch point between the wheel and OSYSU. When in this preferred mounting position, it is usually best to use the white indicator visible through the window, as illustrated in Fig. 3, to aid in initially locating the OSYSU in the correct position on the yoke. If the unit must be installed inverted with the white indicator no longer easily visible, use the visual indicators of the actuator buttons on the micro-switches, as illustrated in Fig. 1, or the trip rod alignment mark on the bracket, as illustrated in Fig. 2 , to aid in initially locating the OSYSU.
8. Final adjustment can be made by slightly loosening the two screws on the bracket and using the fine adjustment feature (see Fig. 5). The adjustment is correct when the plungers on the switches are depressed by the actuator and there is no continuity between the COM and NO terminals on the switches.
9. Tighten the adjustment screws and all mounting hardware securely (20 in-lbs minimum). Check to insure that the rod moves out of the groove easily and that the switches activate within two turns when the valve is operated from the FULL OPEN towards the CLOSED position.
10. Reinstall the cover and tighten the cover screws to 15 in-lbs minimum to properly seal the enclosure.

⚠ CAUTION

Close the valve fully to determine that the stem threads do not activate the switch. The switch being activated by the stem threads could result in a ***false valve open*** indication.

Large Valve Installation - 3" Through 12" Sizes

Fig 7

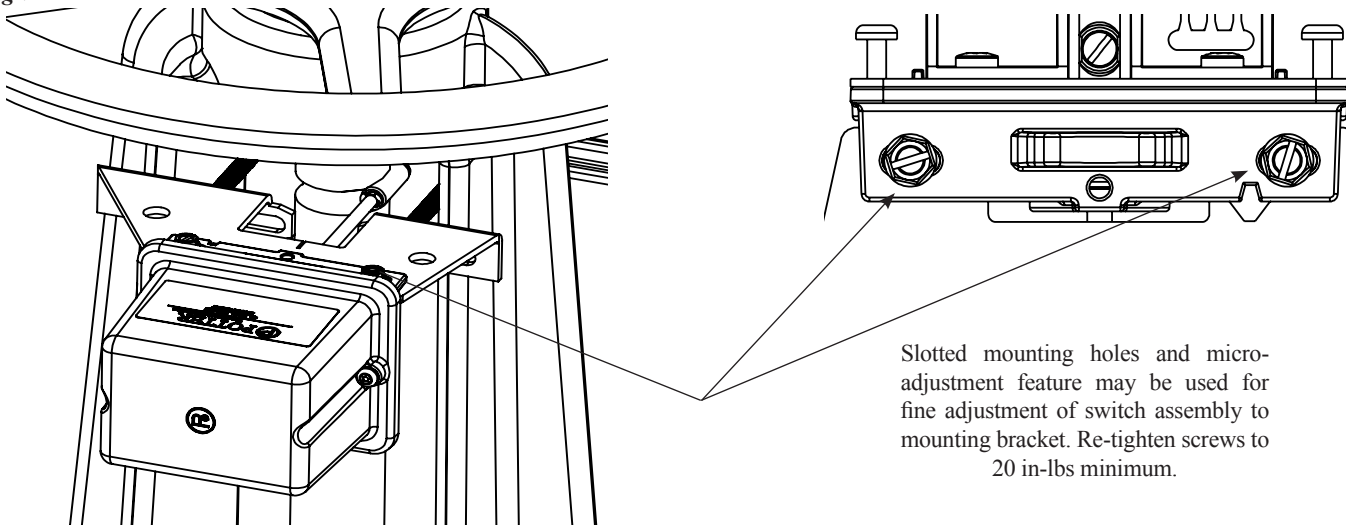

Slotted mounting holes and micro-adjustment feature may be used for fine adjustment of switch assembly to mounting bracket. Re-tighten screws to 20 in-lbs minimum.

Large Valve Installation

NOTE: If the valve stem is pre-grooved at 1/8" minimum depth; proceed to step 6.

1. With the valve in the FULL OPEN position, locate the OSYSU across the valve yoke as far from the valve gland as possible so that the spring loaded trip rod of the OSYSU is pulled against the non threaded portion of the valve stem. Position the OSYSU with the bracket near the handwheel as shown in Fig. 7 if possible to avoid creating a pinch point between the wheel and the OSYSU.
2. Mount the OSYSU loosely with the carriage bolts and clamp bar supplied.
3. Loosen the locking screw that holds the trip rod in place and adjust the rod length (see Fig. 5). When adjusted properly, the rod should extend past the valve screw, but not so far that it contacts the clamp bar. Tighten the locking screw to 5 in-lbs minimum to hold the trip rod in place and properly seal the enclosure.

   NOTE: If trip rod length is excessive, loosen the locking screw and remove the trip rod from the trip lever. Using pliers, break off the one (1) inch long notched section (see Fig. 10). Reinstall trip rod and repeat Step 3 procedure.
4. Mark the valve stem at the center of the trip rod.
5. Remove the OSYSU. Utilizing a 3/8" or ½" diameter straight file, file a 1/8" minimum depth groove centered on the mark on the valve stem. Deburr and smooth the edges of the groove to prevent damage to the valve packing and to allow the trip rod to move easily in and out of the groove as the valve is operated.

   NOTE: A groove depth of up to approximately 3/16" can make it easier to install the OSYSU so that it does not restore as it rolls over by the threads of the valve stem.
6. Mount the OSYSU on the valve yoke with the spring loaded trip rod of the OSYSU pulled against the valve stem and centered in the groove of the stem. If possible, position the OSYSU with the flat side of the bracket toward the hand wheel, as shown in Fig. 7, to help avoid creating a pinch point between the wheel and OSYSU. When in this preferred mounting position, it is usually best to use the white indicator visible through the window, as illustrated in Fig. 3, to aid in initially locating the OSYSU in the correct position on the yoke. If the unit must be installed inverted with the white indicator no longer easily visible, use the visual indicators of the actuator buttons on the micro-switches, as illustrated in Fig. 1, or the trip rod alignment mark on the bracket, as illustrated in Fig. 2 , to aid in initially locating the OSYSU.
7. Final adjustment can be made by slightly loosening the two screws on the bracket and using the fine adjustment feature (see Fig. 5). The adjustment is correct when the plungers on the switches are depressed by the actuator and there is no continuity between the COM and NO terminals on the switches.
8. Tighten the adjustment screws and mounting hardware securely (minimum 20 in-lbs). Check to insure that the rod moves out of the groove easily and that the switches activate within two turns when the valve is operated from the FULL OPEN towards the CLOSED position.
9. Reinstall the cover and tighten the cover screws to 15 in-lbs minimum to properly seal the enclosure.

⚠ CAUTION

Close the valve fully to determine that the stem threads do not activate the switch. The switch being activated by the stem threads could result in a ***false valve open*** indication.

Dimensions

Fig 8

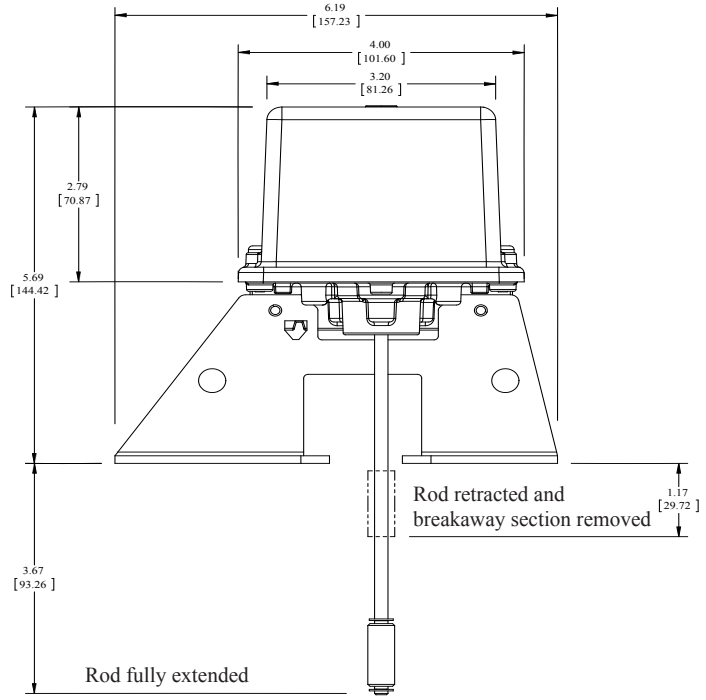

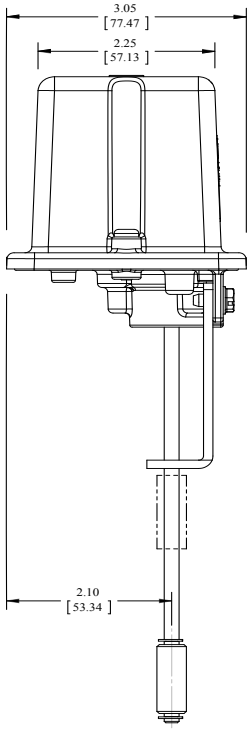

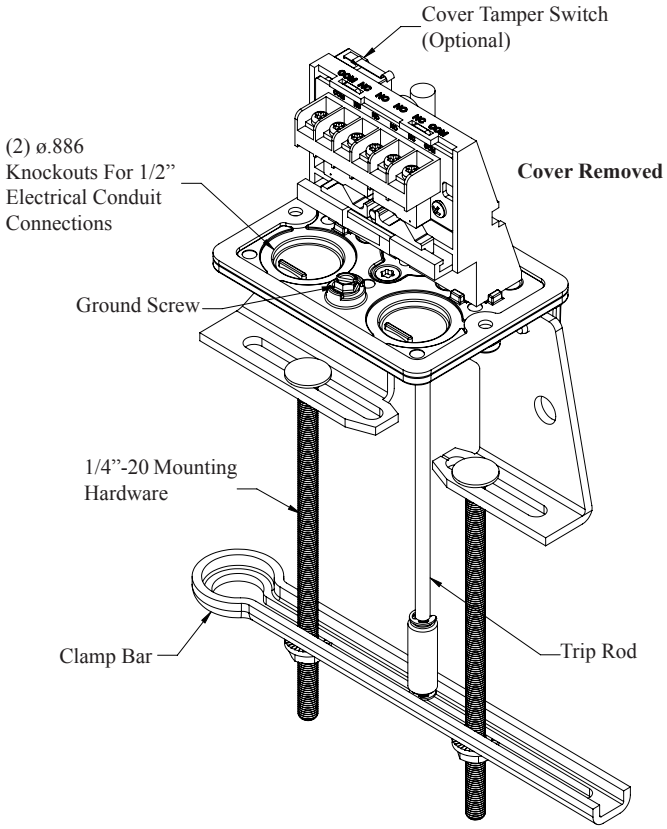

Knockout Removal

Fig 9

To remove knockouts: Place screwdriver at inside edge of knockouts, not in the center.

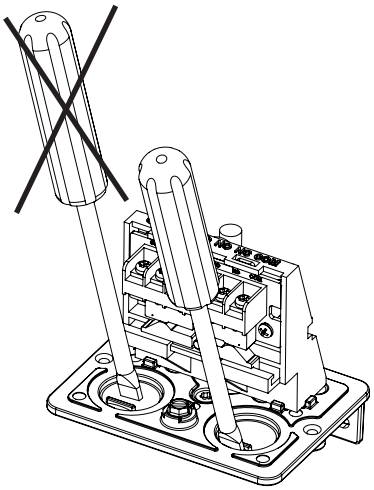

NOTE: Do not drill into the base as this creates metal shavings which can create electrical hazards and damage the device. Drilling voids the warranty.

Breaking Excessive Rod Length

Fig 10

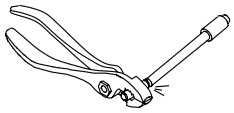

Switch Terminal Connections Clamping Plate Terminal

Fig 11

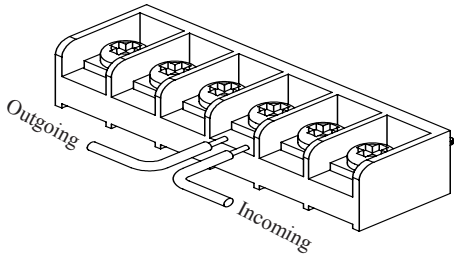

⚠ WARNING

An uninsulated section of a single conductor should not be looped around the terminal and serve as two separate connections. The wire must be severed, thereby providing supervision of the connection in the event that the wire become dislodged from under the terminal. Failure to sever the wire may render the device inoperable risking severe property damage and loss of life. Do not strip wire beyond 3/8" of length or expose an uninsulated conductor beyond the edge of the terminal block. When using stranded wire, capture all strands under the clamping plate.

NOTICE

All conduit and connectors selected for the installation of this product shall be suitable for the environment for which it is to be used and shall be installed to the manufacturer's installation instructions. For NEMA 4, 4X, 6, 6P installations, the cover screws are recommended to be tightened to 15 in-lbs minimum and the trip rod locking screw tightened to 5 in-lbs minimum to properly seal the enclosure.

Typical Electrical Connections

Fig 12

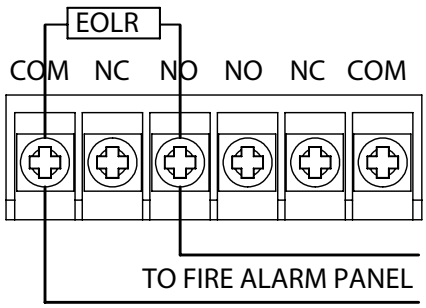

Ordering Information

Model	Description	Stock No.
OSYSU-1	Outside Screw & Yoke Supervisory Switch (Single switch)	1010102
OSYSU-2	Outside Screw & Yoke Supervisory Switch (Double switch)	1010202
OSYSU-2 CRH	Outside Screw & Yoke Supervisory Switch (Double Switch). Corrosion resistant hardware of 316 stainless steel & nickel plated to ASTM B377 Type V Brackets	1010210
	Cover Screw	5490424
	Hex Key for Cover Screws and Installation Adjustments	5250062
	Optional Cover Tamper Switch Kit	0090200

Engineering Specifications: OS&Y Valves

UL, CUL Listed / FM Approved and CE Marked valve supervisory switches shall be furnished and installed on all OS&Y type valves that can be used to shut off the flow of water to any portion of the fire sprinkler system, where indicated on the drawings and plans and as required by applicable local and national codes and standards. The supervisory switch shall be NEMA 4X and 6P rated and capable of being mounted in any position indoors or out and be completely submerged without allowing water to enter the enclosure.. The enclosure shall be held captive by tamper resistant screws. The device shall contain two ½" conduit entrances and one or two Single Pole Double Throw (SPDT) switches. There shall be a visual indicator to display the status of the switches. To aid in installation, it shall be possible to make fine adjustments to the position of the switch on the valve without loosening the mounting bracket from the valve. The device shall contain an adjustable length trip rod and roller, the trip rod shall be held captive by a set screw accessible upon removal of the cover. The switch contacts shall be rated at 10A, 125/250VAC and 2A, 30VDC. OS&Y Valve supervisory switch shall be model OSYSU-1 for the single switch model and OSYSU-2 for the two switch model manufactured by Potter Electric Signal Company LLC

NOTICE

Supervisory switches have a normal service life of 10-15 years. However, the service life may be significantly reduced by local environmental conditions.