ULR-C-400

NFPA-20 Fire Pump & Controller
Packaged Fire Pump System

4-383-9

400GPM

Test Port, City Bypass

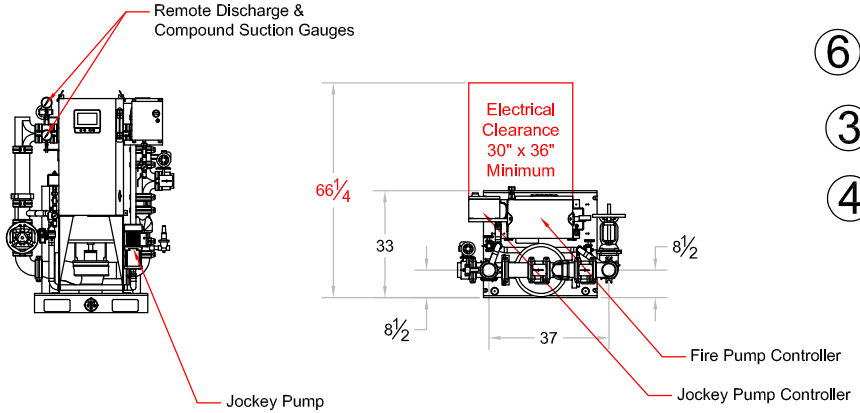

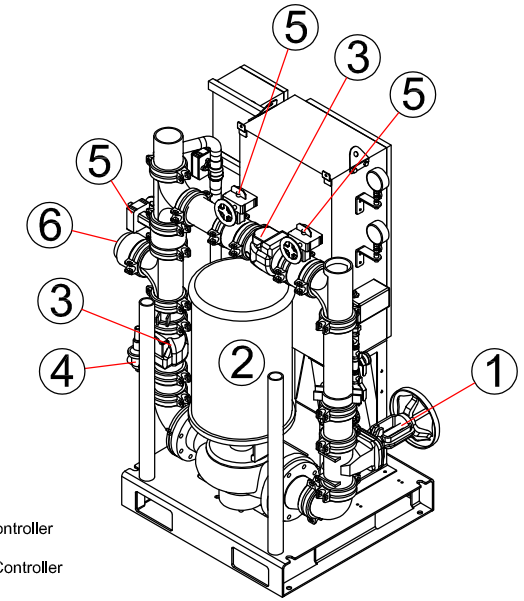

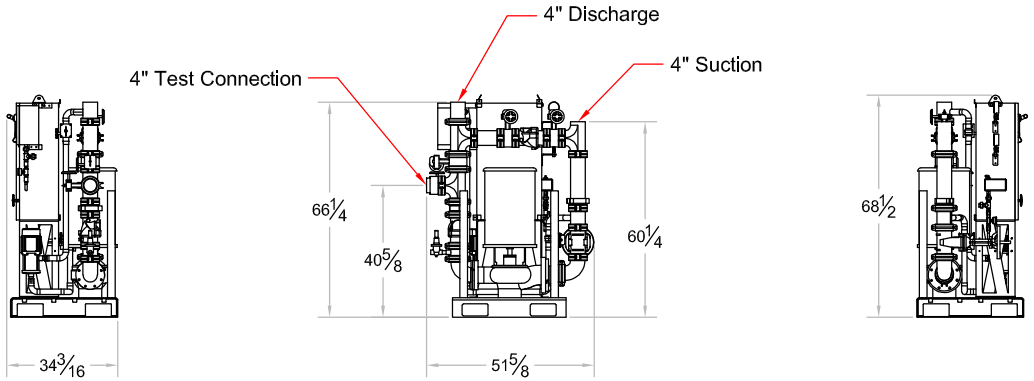

System Components

1	OS&Y Gate Valve
2	Inline Pump & Motor
3	Check Valve
4	Case Relief Valve
5	Monitored Butterfly
6	4" Test Connection

Design Conditions:

400GPM@80PSI

30HP, 208V, 3PH

Sensing Line Detail

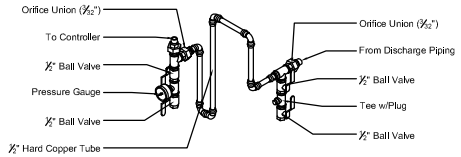

Pressure Sensing Lines constructed in accordance with NFPA 20:
All brass or copper components, orifice unions at connections to both discharge piping & controller valve assembly, minimum 60" hard copper tubing.

Jockey System Detail

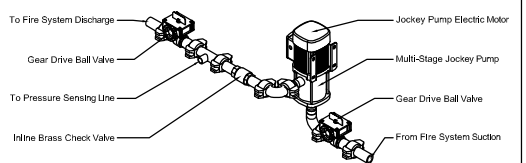

Jockey Pump System constructed in accordance with NFPA 20:
All components 1¼", Grooved end or NPT fittings.

Controller: Tornatech GPA 30HP, 208V, 3PH

Jockey Pump: Grundfos CM1-7 1.5HP, 208V, 3PH

Jockey Controller: Tornatech JPLT 1.5HP, 208V, 3PH

Suction x Discharge: 4" Grooved Connections

All dimensions inches - Not certified for construction purposes.

TALCO FIRE SYSTEMS

RESIDENTIAL & COMMERCIAL FIRE PUMP SPECIALISTS
6040 NE 112TH AVE. PORTLAND, OREGON 97220
PHONE: 800-878-8055 WWW.TALCOFIRE.COM

ULR-C-400

RIGHT HAND SUCTION

400GPM

Test Port, City Bypass

NFPA-20 Fire Pump & Controller

Packaged Fire Pump System

4-383-9

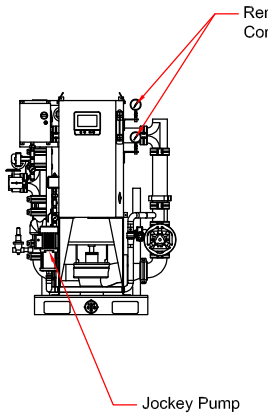

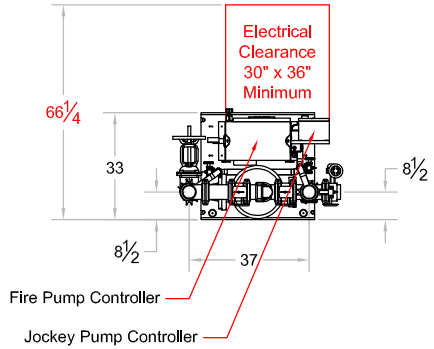

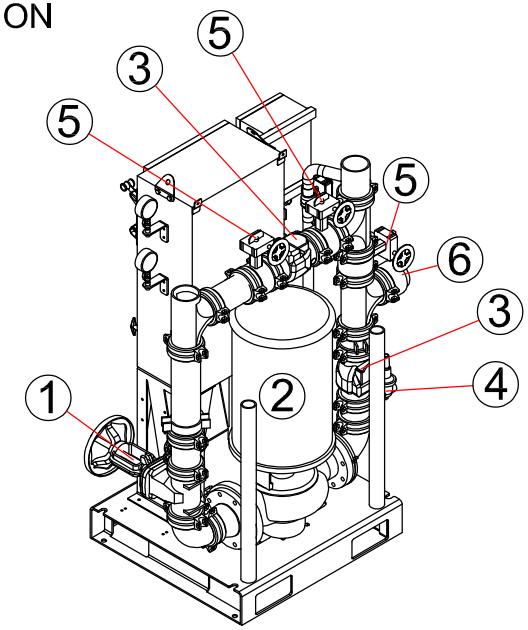

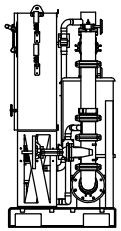

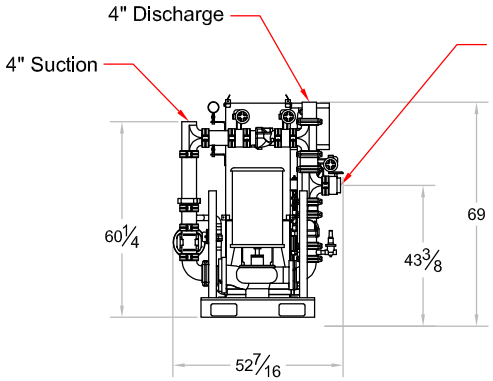

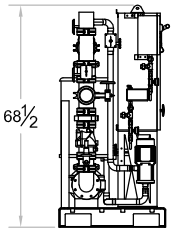

System Components

1	OS&Y Gate Valve
2	Inline Pump & Motor
3	Check Valve
4	Case Relief Valve
5	Monitored Butterfly
6	4" Test Connection

Design Conditions:

400GPM@80PSI

30HP, 208V, 3PH

Sensing Line Detail

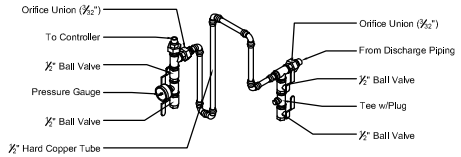

Pressure Sensing Lines constructed in accordance with NFPA 20:
All brass or copper components, orifice unions at connections to both discharge piping & controller valve assembly, minimum 60" hard copper tubing.

Jockey System Detail

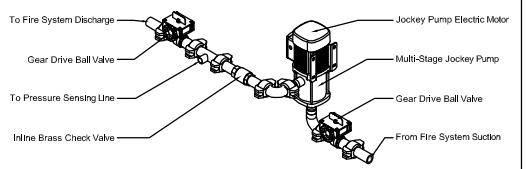

Jockey Pump System constructed in accordance with NFPA 20:
All components 1¼", Grooved end or NPT fittings.

Controller: Tornatech GPA 30HP, 208V, 3PH

Jockey Pump: Grundfos CM1-7 1.5HP, 208V, 3PH

Jockey Controller: Tornatech JPLT 1.5HP, 208V, 3PH

Suction x Discharge: 4" Grooved Connections

All dimensions inches - Not certified for construction purposes.

TALCO FIRE SYSTEMS

RESIDENTIAL & COMMERCIAL FIRE PUMP SPECIALISTS
6040 NE 112TH AVE. PORTLAND, OREGON 97220
PHONE: 800-878-8055 WWW.TALCOFIRE.COM