Portland, OR
(503) 688-1231 / (503) 688-1234(FAX)

HDR-150

150GPM Fire Pump Package

Submittal Packet

TALCO FIRE SYSTEMS

RESIDENTIAL & COMMERCIAL FIRE PUMP SPECIALISTS
6040 NE 112TH AVE. PORTLAND, OR 97220
800-878-8055 WWW.TALCOFIRE.COM

Residential Packaged Fire Pump System

HDR-150

Heavy Duty Residential Package
Design Condition: 150GPM @ 65PSI

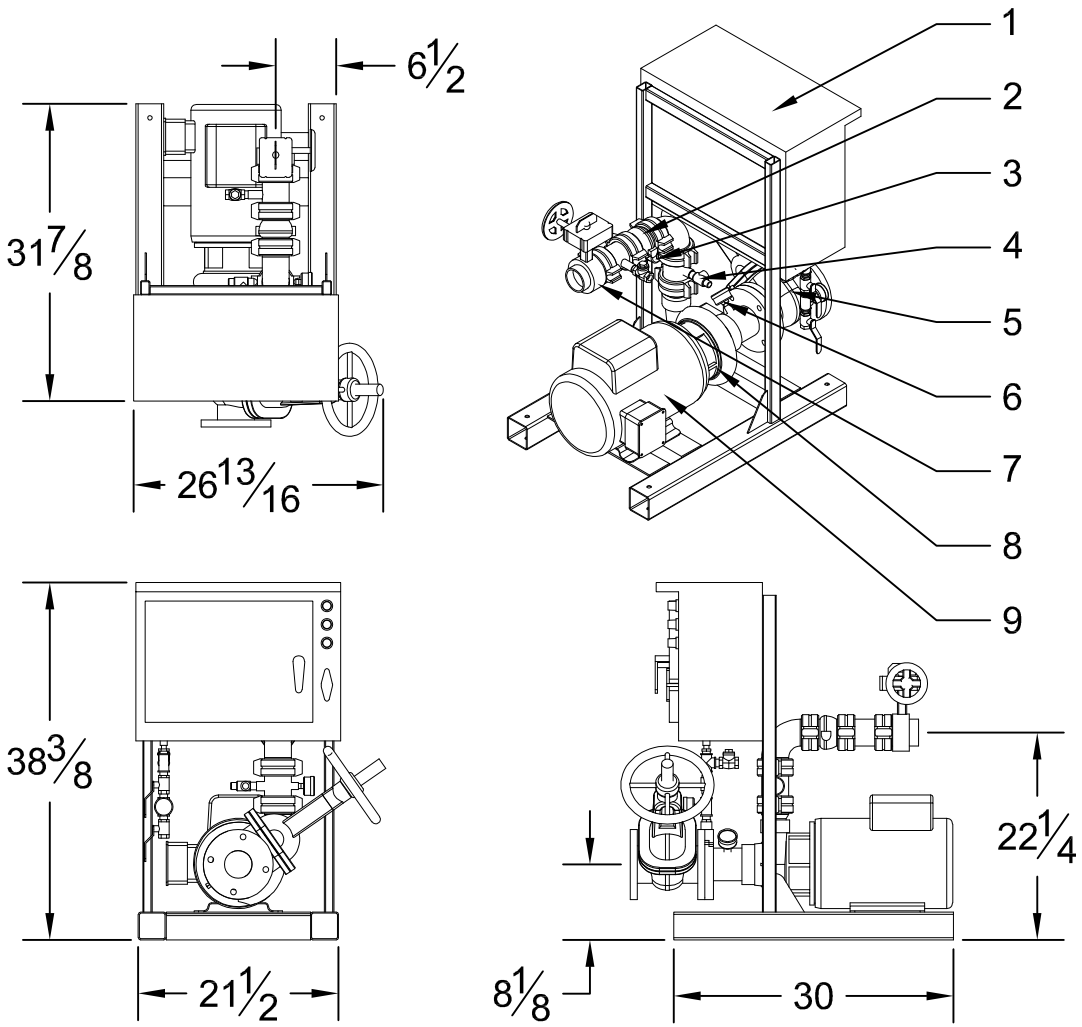

System Specifications:

Motor
-10 Horsepower Electric
-230 Volt
-46 Amp
-Single Phase
-3450 RPM

Pump
-End Suction Centrifugal Pump
-3" Suction (NPT)
-2 ½" Discharge (NPT)
-175 PSI max working pressure

System Components
-1- Residential Fire Pump Controller
-2- Check Valve
-3- Discharge Pressure Gauge
-4- Case Relief Valve
-5- Suction OS&Y Gate Valve
-6- Suction Pressure Gauge
-7- Discharge Monitored Butterfly Valve
-8- End Suction Pump
-9- Electric Motor
-Not Shown- Copper Sensing Line (per NFPA20)

Performance

Performance values based on multiple pump tests. Not for certification purposes.

GPM	0	60	90	110	150	180	200	225
PSI	72	72	71	70	67	64	62	57

Please Note: This fire pump system uses an unlisted pump & a residential controller. Please submit to your AHJ for approval prior to ordering.

TALCO Fire Systems

HDR-150

PUMP DATA

150GPM @ 65PSI

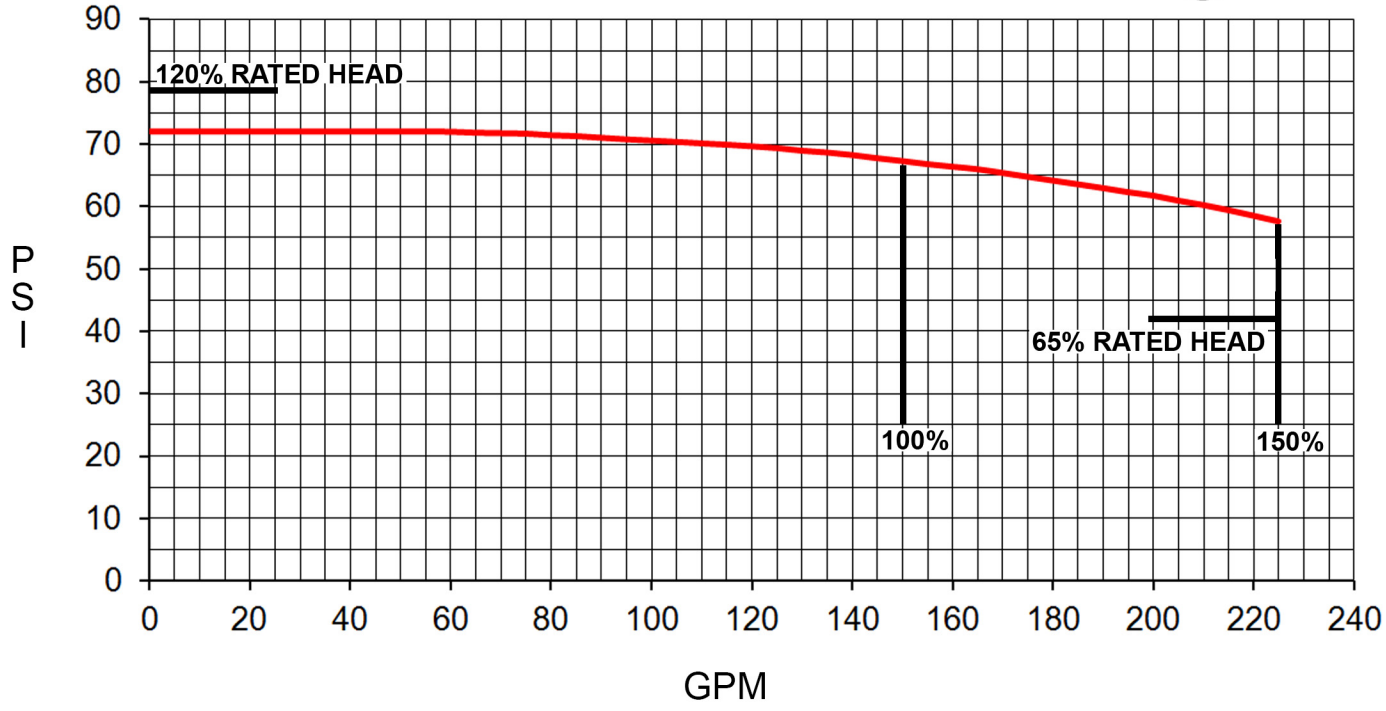

System Specifications

Motor

- -10 HP Electric Motor
- -230 Volt, 46 Amp
- -Single Phase
- -3450 RPM
- -JM Frame
- -Shaft Sleeve/O-Ring for Protection Against Shaft Damage
- -Sealed Motor Bearings to Carry Axial & Thrust Loads
- -Open Drip Proof (ODP)

Pump

- -High Pressure Cast Iron Volute
- -Machined Bronze Impeller
- -3” Suction
- -2” Discharge
- -150 PSI Max Working Pressure

Product Description

Eaton Cutler Hammer Residential Fire Pump Controllers work in conjunction with single phase, electric, residential fire pumps and packages. Available as a Simplex or Duplex unit, all controllers are UL listed and meet or exceed NEMA requirements.

Product Features

Sequential Start Timer

A sequential start timer may be installed which is used to program a start delay after the pressure switch initiates an automatic start. In duplex controllers, a SST is standard and is wired to delay starting the second (lag) pump. The timer does not operate if starting is initiated via the start pushbutton or emergency start handle.

Run Period Timer

The run period timer turns on whenever the controller starts due to a drop in pressure. This ensures that the pump motor is not subjected to frequent starts if the pressure switch contact repeatedly closes and opens at short time intervals because of pressure fluctuations.

NEMA 2 Enclosures

All FDR controllers are supplied with NEMA 2 enclosures.
Contact factory for availability of other styles.

Alarm & Status Indication

Both Simplex and Duplex controllers are equipped with illuminated pushbuttons which have dual use.
The green “POWER ON” pushbutton functions as the “Start” pushbutton and indicates when the circuit breaker is closed.
The red “PUMP RUNNING” pushbutton functions as the “Stop” pushbutton and indicates when the pump is running.

When the controller starts the fire pump, the red Pump Running light turns on as well as the buzzer mounted on the front panel.

Mounting Bars

FDR residential controllers can be supplied with optional upper and lower mounting bars.

Optional Floor Mount Legs

Optional 12 inch high floor mounting legs are available upon request.

Dual Setting Pressure Switch

A dual setting 15 290 PSI pressure switch is used to sense a drop in pressure which actuates the residential controller. The setting adjustment screws are used for setting the pressure range and differential. There is one set of form C output contacts rated at 10 amps.

NEMA Rated Contactors

Cutler Hammer NEMA rated Freedom Contactors are used in all FDR Residential fire pump controllers. A wide variety of coil voltages are available for domestic and international use.

Emergency Start Operator

A mechanically operated emergency start handle activates the motor contactor independent of any electrical control circuits or pressure switch input.

Standards & Certification

The FDR Residential Fire Pump Controllers meet or exceed the requirements of Underwriters Laboratories, Underwriters Laboratories Canada, the Canadian Standards Association, and the New York City building code.

N. Y. C. APPROVED

Dimensions

Standard Enclosure - Duplex - Type NEMA 2

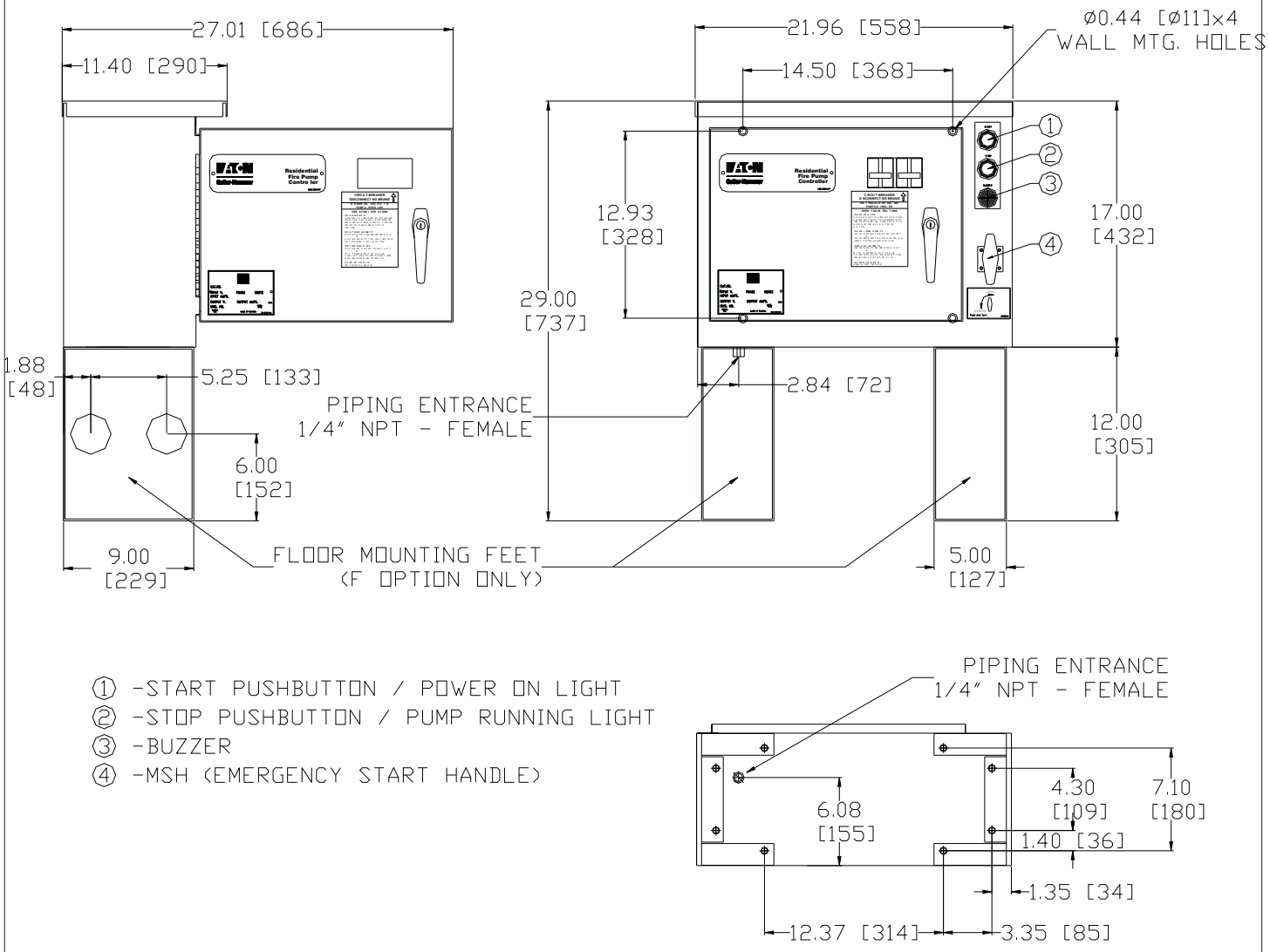

Motor Hp	Line Voltage	Withstand Rating		Approx. Weight Lbs. (Kg)
		Standard	Intermediate	
½ 10	230V Single Phase	10,000	22,000	60 (27)

N. Y. C. APPROVED

NOTES:
1. All enclosures finished in FirePump red.
2. Cable Entrance either top or bottom.
3. Standard Enclosure type NEMA 2.
4. Add 12 inches height for optional floor stands.

Electrical Wiring Schematic

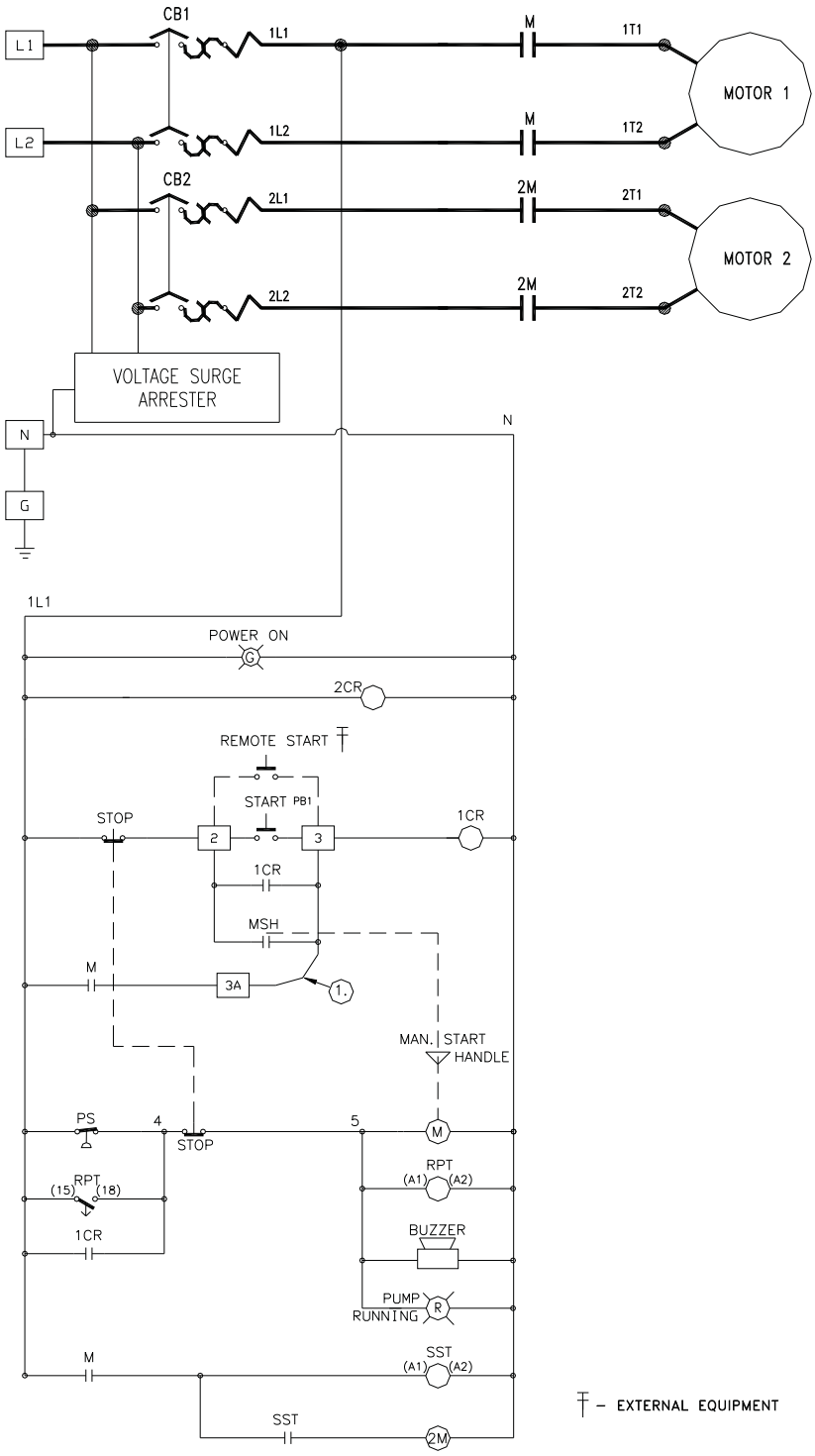

LEGEND:

M–PUMP 1 RUN CONTACTOR
2M–PUMP 2 RUN CONTACTOR
1CR–MANUAL CONTROL RELAY
2CR–POWER FAILURE RELAY
PS–PRESSURE SWITCH
CB–CIRCUIT BREAKER
STOP–LOCAL STOP SWITCH
START–LOCAL START SWITCH
MSH–MANUAL START HANDLE (AUX. CONTACT)
RPT–RUN PERIOD TIMER
SST–SEQUENTIAL START TIMER

NOTES:

1. ADD JUMPER TO CONVERT TO SEMI–AUTOMATIC.
2. ALL RELAY CONTACTS SHOWN IN NO POWER CONDITION.
3. FOR CUSTOMER REMOTE START, CONNECT DRY CONTACT BETWEEN TERMINALS 2 & 3.
4. SERVICE ENTRANCE EQUIPMENT. (DOES NOT MEET CSA SERVICE ENTRANCE REQUIREMENTS)

N. Y. C. APPROVED

TALCO Fire Systems

NFPA20 Pressure Sensing Line Detail

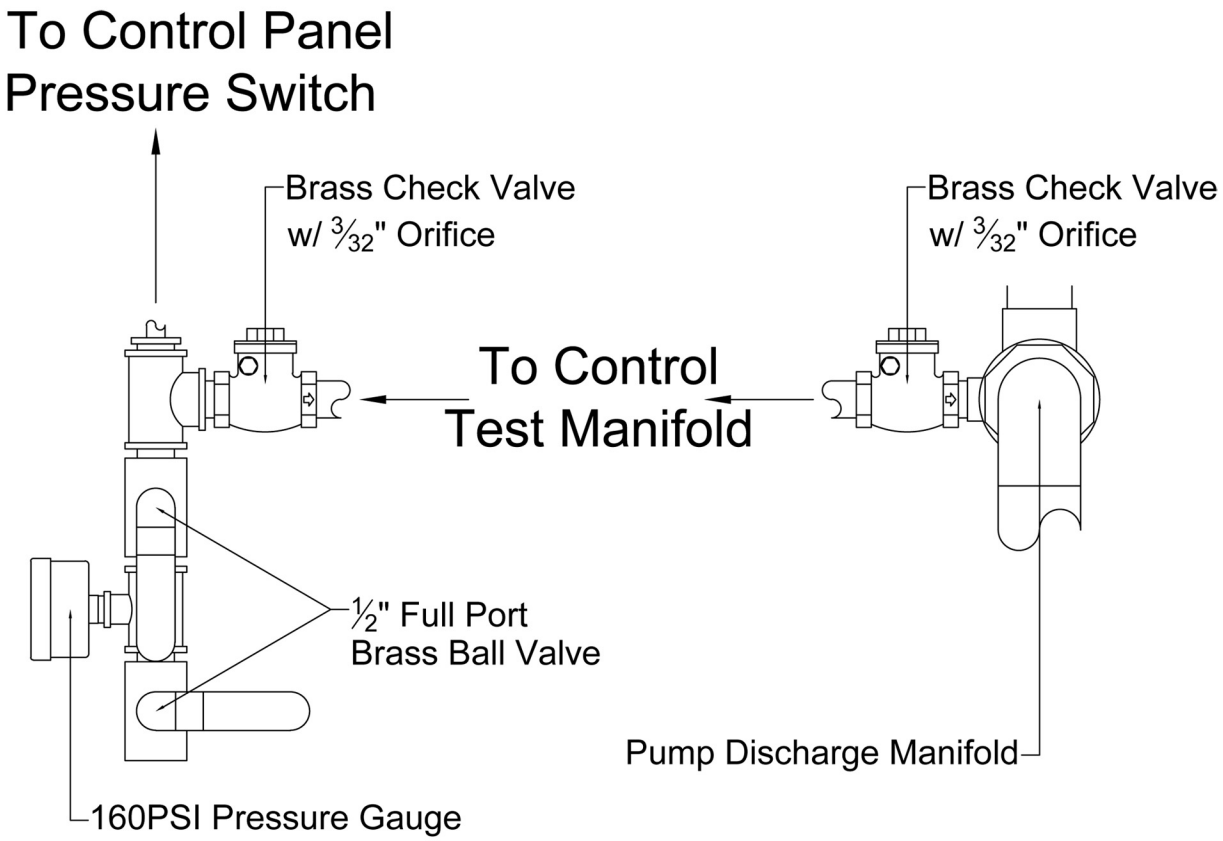

Sensing line constructed in accordance with NFPA20: 5 feet minimum ½" hard copper tubing, joints solder sealed, components brass NPT.

For Commercial, Institutional and Industrial Applications

Job Name _____ Contractor _____

Job Location _____ Approval _____

Engineer _____ Contractor's P.O. No. _____

Approval _____ Representative _____

Series 530C
Calibrated Pressure Relief Valves

Sizes: ½" or ¾" (15 or 20mm)

Series 530C Calibrated Pressure Relief Valves are spring operated brass valves designed for use only as protection from the build up of excessive pressure in systems containing water, oil or air. Series 530C valves incorporate a calibrated adjustment feature for setting the valve to the relief pressure required. These valves are ideally suited for bypass thermal expansion relief.

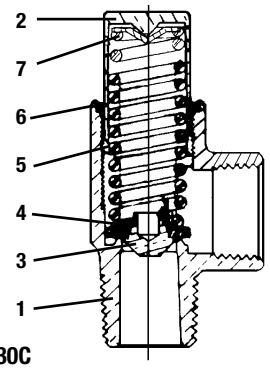

Model 530C

Features

- Calibrated adjustment feature for setting valve to relief pressure required
- Adjustable range 50 – 175psi (3.4 – 12.1 bar)
- All brass construction
- All stainless steel spring
- Buna-N disc on machined body seat
- Inlet (bottom), male NPT threaded
- Outlet (side), female NPT threaded

Materials

1. Body	Brass
2. Bonnet	Brass
3. Disc Holder	Brass
4. Disc	Buna-N (Nitrile)
5. Adjustable Spring	Stainless Steel
6. O-ring	Buna-N (Nitrile)
7. Spring Washer	Brass

Pressure – Temperature

Maximum Temperature: 180°F (82°C)

Spring Ranges

½" or ¾" (15 or 20mm): 50 – 175psi (3.4 – 12.1 bar)
¾" (20mm): 100 – 300psi (6.9 – 20.7 bar)

Application Note: The Watts Series 530C are not ASME approved safety relief valves and should not be used in system application with this requirement.

MODEL	SIZE (DN)		DIMENSIONS				WEIGHT	
			Height		Width			
	in.	*mm*	*in.*	*mm*	*in.*	*mm*	*lbs.*	*kg.*
530C	½ or ¾	15 or 20	3	76	1⅝	41	.37	0.17

Capacity (530C)

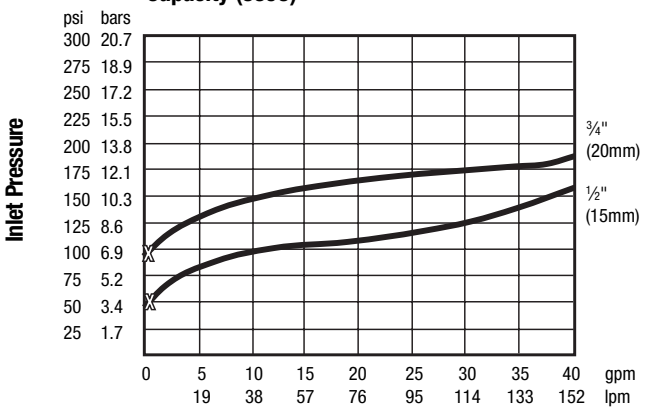

X = Set Point Flow

Watts product specifications in U.S. customary units and metric are approximate and are provided for reference only. For precise measurements, please contact Watts Technical Service. Watts reserves the right to change or modify product design, construction, specifications, or materials without prior notice and without incurring any obligation to make such changes and modifications on Watts products previously or subsequently sold.

ISO 9001 CERTIFIED

WATTS®

Water Safety & Flow Control Products

USA: 815 Chestnut St., No. Andover, MA 01845-6098; www.watts.com
Canada: 5435 North Service Rd., Burlington, ONT. L7L 5H7; www.wattscanada.ca

©Watts Regulator Company, 2006

FireLock® Check Valves

SERIES 717

SEE VICTAULIC PUBLICATION 10.01 FOR DETAILS

Series 717 FireLock check valve is a CAD-developed design that is hydrodynamically efficient. A totally rubber encapsulated disc on 4 – 12"/100 – 300 mm sizes provides superior corrosion resistance. This single disc design incorporates a spring assisted feature for non-slamming operation. For systems requiring a Riser Check option refer to section 10.09.

The 4"/100 mm and larger sizes are provided with upstream and downstream drains and a welded-in nickel seat design. All sizes of Series 717 can be installed in the vertical or horizontal position to provide leak-free sealing under conditions as low as five feet of head. Each valve is factory tested to 500 psi/3440 kPa. The 2 ½ and 3"/65 and 80 mm sizes are UL/ULC Listed and 4"/100 mm sizes and larger are UL/ULC Listed and FM Approved for services up to 250 psi/1725 kPa. Sizes 4 – 8"/100 – 200 mm (except 165.1 mm size) are VdS approved.

Grooved ends allow fast, easy installation with just two Victaulic couplings or the valve may be mounted to flanged (ANSI CL.150) equipment using either to Victaulic Style 741 Vic-Flange® or Style 744 FireLock flange adapters on either end.

DIMENSIONS

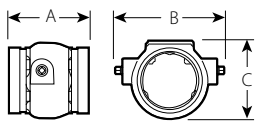

TYPICAL 2 ½ – 3"/65 – 80 MM

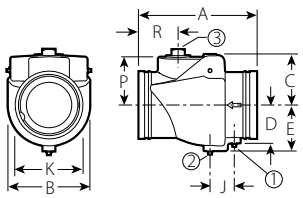

① ½" NPT Upstream Drain
② ½" NPT Downstream Drain
③ 2" NPT (Drain Optional)

TYPICAL 4 – 8"/100 – 200 MM

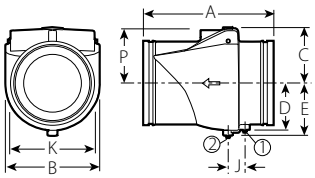

① ½" NPT Upstream Drain
② ½" NPT Downstream Drain

TYPICAL 10 – 12"/250 – 300 MM

Size		Dimensions- Inches/millimeters									Approx. Wgt. Ea.
Nominal Size Inches mm	Actual Outside Diameter Inches mm	E to E A	B	C	D	E	J	K	P	R	Lbs. kg
2 ½ 65	2.875 73.0	3.88 99	4.26 108	3.57 91	—	—	—	—	—	—	3.6 1.6
76.1 mm	3.000 76.1	3.88 99	4.26 108	3.57 91	—	—	—	—	—	—	3.6 1.6
3 80	3.500 88.9	4.25 108	5.06 129	4.17 106	—	—	—	—	—	—	4.5 2.0
4 † 100	4.500 114.3	9.63 245	6.00 152	3.88 99	2.75 70	3.50 89	2.00 51	4.50 114	3.50 89	3.35 85	20.0 9.1
5 † 125	5.563 141.3	10.50 267	6.80 173	4.50 114	—	4.17 106	2.15 55	5.88 149	4.08 104	3.98 101	27.0 12.3
139.7 mm †	5.500 139.7	10.50 267	6.80 173	4.50 114	—	4.17 106	2.15 55	5.88 149	4.08 104	3.98 101	27.0 12.3
6 † 150	6.625 168.3	11.50 292	8.00 203	5.00 127	—	4.50 114	2.38 61	6.67 169	4.73 120	3.89 99	38.0 17.2
165.1 mm	6.500 165.1	11.50 292	8.00 203	5.00 127	—	4.50 114	2.38 61	6.67 169	4.73 120	3.89 99	38.0 17.2
8 † 200	8.625 219.1	14.00 356	9.88 251	6.06 154	5.05 128	5.65 144	2.15 55	8.85 225	5.65 144	5.75 146	64.0 29.0
10 250	10.750 273.0	17.00 432	12.00 305	7.09 180	5.96 151	6.69 170	2.15 55	10.92 277	6.73 171	—	100.0 45.4
12 300	12.750 323.9	19.50 495	14.00 356	8.06 205	6.91 176	7.64 194	2.51 64	12.81 925	7.73 196	—	140.0 63.5

† VdS Approved

JOB/OWNER

System No. _____

Location _____

CONTRACTOR

Submitted By _____

Date _____

ENGINEER

Spec Sect _____ Para _____

Approved _____

Date _____

WWW.VICTAULIC.COM

VICTAULIC IS A REGISTERED TRADEMARK OF VICTAULIC COMPANY. © 2007 VICTAULIC COMPANY. ALL RIGHTS RESERVED. PRINTED IN THE USA.

FireLock® Check Valves

SERIES 717

MATERIAL SPECIFICATIONS

Body: Ductile iron conforming to ASTM A-536, grade 65-45-12. Ductile iron conforming to ASTM A-395, grade 65-45-15, is available upon special request. 2½ – 3"/65 – 80mm sizes PPS coated. 4 – 12"/100 – 300mm sizes painted black enamel.

Body Seat: 2½ – 3"/65 – 80mm sizes PPS coated. 4 – 12"/100 – 300mm integrally welded on nickel alloy.

Disc Seal or Coating:

- **Grade "E" EPDM**
  EPDM (Green color code). Temperature range –30°F to +230°F/–34°C to +110°C. Recommended for cold and hot water service within the specified temperature range plus a variety of dilute acids, oil-free air and many chemical services. UL classified in accordance with ANSI/NSF 61 for cold +86°F/+30°C and hot +180°F/+82°C potable water service. NOT RECOMMENDED FOR PETROLEUM SERVICES.

* Services listed are General Service Recommendations only. It should be noted that there are services for which these gaskets are not recommended. Reference should always be made to the latest Victaulic Gasket Selection Guide for specific gasket service recommendations and for a listing of services which are not recommended.

Discs:

- 2½ – 3"/65 – 80mm Aluminum bronze conforming to ASTM B-148 with Grade "E" Seal.
- 4 – 12"/100 – 300mm ductile iron conforming to ASTM A-536, grade 65-45-12, fully encapsulated in Grade "E" elastomer.

Shaft: 2½ – 3"/65 – 80mm Type 416 stainless steel. 4 – 12"/100 – 300mm Type 316 stainless steel.

Spring: All sizes Type 302/304 stainless steel.

Shaft Plug: 2½ – 3"/65 – 80mm only; SAE Hex Socket Type conforming to ASTM A-576, cadmium plated to military specifications QQ-P-416A, class 3 type 2. 4 – 12"/100 – 300mm only; carbon steel zinc plated to ASTM B-633.

Pipe Plug: 4 – 12"/100 – 300mm only; carbon steel zinc plated to ASTM B-633.

VICTAULIC IS A REGISTERED TRADEMARK OF VICTAULIC COMPANY. © 2007 VICTAULIC COMPANY. ALL RIGHTS RESERVED. PRINTED IN THE USA.

FireLock® Check Valves

SERIES 717

FLOW CHARACTERISTICS

The chart below expresses the flow of water at 65°F/18°C through a full open valve.

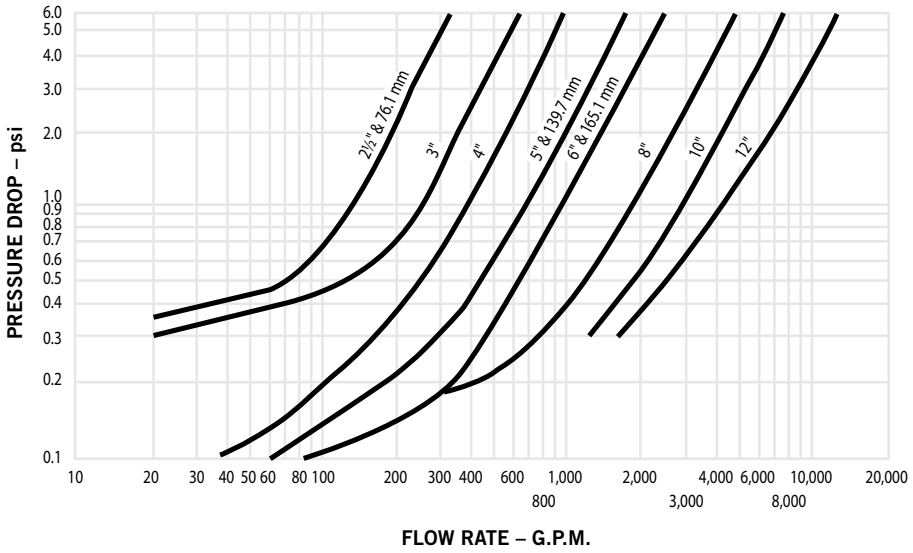

VICTAULIC IS A REGISTERED TRADEMARK OF VICTAULIC COMPANY. © 2007 VICTAULIC COMPANY. ALL RIGHTS RESERVED. PRINTED IN THE USA.

FireLock® Check Valves

SERIES 717

INSTALLATION

Reference should always be made to the I-100 Victaulic Field Installation Handbook for the product you are installing. Handbooks are included with each shipment of Victaulic products for complete installation and assembly data, and are available in PDF format on our website at www.victaulic.com.

WARRANTY

Refer to the Warranty section of the current Price List or contact Victaulic for details.

NOTE

This product shall be manufactured by Victaulic or to Victaulic specifications. All products to be installed in accordance with current Victaulic installation/assembly instructions. Victaulic reserves the right to change product specifications, designs and standard equipment without notice and without incurring obligations.

WCAS-77LKQ6

For complete contact information, visit www.victaulic.com

10.08 1479 REV H UPDATED 10/2007

VICTAULIC IS A REGISTERED TRADEMARK OF VICTAULIC COMPANY. © 2007 VICTAULIC COMPANY. ALL RIGHTS RESERVED. PRINTED IN THE USA.

FireLock® Butterfly Valve

MEA: 276-99-E CSFM: 7770-0531:113

SERIES 705W
WITH WEATHERPROOF ACTUATOR

The Series 705W butterfly valve features an approved weatherproof actuator housing approved for indoor or outdoor use. It has a ductile iron body and disc with EPDM disc coating. The body is coated with a heat fused polyphenylene sulfide blend to meet FM requirements. Designed for fire protection services only. Series 705W valve is UL Listed and FM Approved for 300 psi/2065 kPa service. Contact Victaulic for details of agency approvals.

WEATHERPROOF ACTUATOR

Supervisory switches that monitor the valve in the fully open position for valves are available 2½ – 12"/65 – 300 mm pre-wired (PW).

OPTIONAL SUPPLY-SIDE TAP

Series 705W valves are available with a ½" NPT supply side tap designed to allow direct water supply connection to Victaulic FireLock actuated fire protection valves. See separate drawings below. This is an optional feature and must be clearly noted on all orders.

MATERIAL SPECIFICATIONS

Body: Ductile iron conforming to ASTM A-536, coated with polyphenylene sulfide blend.

Disc: Ductile iron conforming to ASTM A-536, various grades, EPDM coated.

Disc Coating:

- **Grade "E" EPDM**
  EPDM (Green color code). Temperature range –30°F to +230°F/–34°C to +110°C. Recommended for cold and hot water service within the specified temperature range plus a variety of dilute acids, oil-free air and many chemical services. UL classified in accordance with ANSI/NSF 61 for cold +86°F/+30°C and hot +180°F/+82°C potable water service. NOT RECOMMENDED FOR PETROLEUM SERVICES.

Stem Bearings: Teflon impregnated fiberglass with stainless steel backing.

Stem Bearing Nuts: Type 416 Stainless Steel.

Tap Plug: Carbon steel, plated.

O-Ring: EPDM

Bracket: Carbon steel, painted.

Actuator:

- 2½ – 8"/65 – 200 mm: Bronze traveling nut on a steel lead screw, in a ductile iron housing.
- 10 – 12"/250 – 300 mm: Steel worm and cast iron quadrant gear, in a cast iron housing.

JOB/OWNER
System No. _____
Location _____

CONTRACTOR
Submitted By _____
Date _____

ENGINEER
Spec Sect _____ Para _____
Approved _____
Date _____

VICTAULIC IS A REGISTERED TRADEMARK OF VICTAULIC COMPANY. © 2006 VICTAULIC COMPANY. ALL RIGHTS RESERVED. PRINTED IN THE USA.

FireLock® Butterfly Valve

SERIES 705W
WITH WEATHERPROOF ACTUATOR

MATERIAL SPECIFICATIONS

Handwheel:

Size	Version	
Inches mm	cULus, LPCB, FM Black Inches mm	VdS * Red mm
2½ – 4 65 – 100	3.0 76.2	125
5 – 6 125 – 150	4.5 114.3	200
8 200	160 mm	250
10 – 12 250 – 300	9 225	

*VdS version not UL Listed, FM Approved or LPCB Approved.

VICTAULIC IS A REGISTERED TRADEMARK OF VICTAULIC COMPANY. © 2006 VICTAULIC COMPANY. ALL RIGHTS RESERVED. PRINTED IN THE USA..

FireLock® Butterfly Valve

SERIES 705W
WITH WEATHERPROOF ACTUATOR

DIMENSIONS – c UL us LISTED FM LPCB

Size		Dimensions – inches/millimeters								Aprx. Wgt. Each
Nominal Size inches mm	Actual Outside Diameter inches mm	End to End "A"	Hgt. "B"	"E"	"F"	"J"	"O"	"N" ‡	"P" ‡	lbs/kg
2½ 65	2.875 73.0	3.77 95.6	8.76 222.5	—	4.21 106.9	6.08 154.4	3.00 76.2	0.00 * 0.0 *	0.75 19.1	8.3 3.8
76.1 mm	3.000 76.1	3.77 95.6	8.76 222.5	—	4.21 106.9	6.08 154.4	3.00 76.2	0.00 * 0.0 *	0.75 19.1	8.3 3.8
3 80	3.500 88.9	3.77 95.6	9.40 238.8	0.08 2.0	4.21 106.9	6.08 154.4	3.00 76.2	0.00 * 0.0 *	0.75 19.1	8.9 4.0
4 100	4.500 114.3	4.63 117.6	10.84 275.3	0.07 1.8	6.01 152.7	6.98 177.3	3.00 76.2	0.73 18.5	1.13 28.7	14.9 6.8
139.7 mm	5.500 139.7	5.88 149.4	12.38 314.5	0.43 10.9	6.01 152.7	8.57 217.7	4.50 114.3	—	—	21.0 9.5
5 125	5.563 141.3	5.88 149.4	12.38 314.5	0.43 10.9	6.01 152.7	8.57 217.7	4.50 114.3	—	—	21.0 9.5
165.1 mm	6.500 165.1	5.88 149.4	13.41 340.6	1.00 25.4	7.51 190.8	9.32 236.7	4.50 114.3	1.60 40.6	1.88 47.8	26.5 12.0
6 150	6.625 168.3	5.88 149.4	13.41 340.6	1.00 25.4	7.51 190.8	9.32 236.7	4.50 114.3	1.60 40.6	1.88 47.8	26.5 12.0
8 200	8.625 219.1	5.33 135.4	16.50 419.1	1.27 32.3	9.65 245.1	10.98 278.9	6.30 160.0	0.00 * 0.0 *	0.68 17.3	43.0 19.5
10 250	10.750 273.0	6.40 162.6	19.14 486.2	1.72 43.7	12.20 309.9	16.19 411.2	9.00 228.6	—	—	80.0 36.3
12 300	12.750 323.9	6.50 165.1	21.54 547.1	2.66 67.6	14.25 362.0	17.22 437.4	9.00 228.6	—	—	102.0 46.3

* On Centerline

‡ These dimensions apply only to a Series 705W Butterfly Valve with a ½-inch NPT, supply-side tap

1. To prevent rotation of valves. it is recommended that Series 705W be installed with Victaulic Style 07 Zero-Flex®, Style 005 FireLock, Style 009/009V FireLock EZ, or Style HP-70 Rigid Couplings. If Victaulic flexible couplings are used. additional support may be required.
2. Valve must not be installed with disc in full open position. Disc must be partly closed so that no part is protruding beyond end of valve body.
3. Victaulic grooved end butterfly valves are permitted for use with grooved end pipe (IPS) only. Not permitted for use with plain end (IPS) pipe.
4. Series 705W valves are designed for ambient weather conditions as opposed to submersible service.

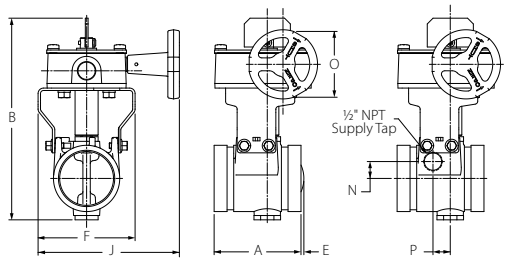

2½ – 4-INCH/65 – 100-MM SIZES

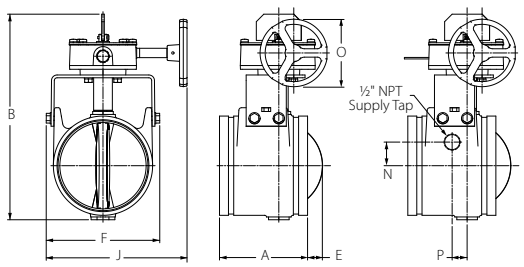

5 – 12-INCH/125 – 300-MM SIZES

VICTAULIC IS A REGISTERED TRADEMARK OF VICTAULIC COMPANY. © 2006 VICTAULIC COMPANY. ALL RIGHTS RESERVED. PRINTED IN THE USA.

FireLock® Butterfly Valve

SERIES 705W
WITH WEATHERPROOF ACTUATOR

DIMENSIONS –

Size		Dimensions – inches/millimeters								Aprx. Wgt. Each
Nominal Size inches mm	Actual Outside Diameter inches mm	End to End "A"	Hgt. "B"	"E"	"F"	"J"	"O"	"N" ‡	"P" ‡	lbs/kg
2½ 65	2.875 73.0	3.77 95.6	8.76 222.5	—	4.21 106.9	6.08 154.4	4.92 125	0.00 * 0.0 *	0.75 19.1	8.3 3.8
76.1 mm	3.000 76.1	3.77 95.6	8.76 222.5	—	4.21 106.9	6.08 154.4	4.92 125	0.00 * 0.0 *	0.75 19.1	8.3 3.8
3 80	3.500 88.9	3.77 95.6	9.40 238.8	0.08 2.0	4.21 106.9	6.08 154.4	4.92 125	0.00 * 0.0 *	0.75 19.1	8.9 4.0
4 100	4.500 114.3	4.63 117.6	10.84 275.3	0.07 1.8	6.01 152.7	6.98 177.3	4.92 125	0.73 18.5	1.13 28.7	14.9 6.8
139.7 mm	5.500 139.7	5.88 149.4	12.38 314.5	0.43 10.9	6.01 152.7	8.57 217.7	7.87 200	—	—	21.0 9.5
5 125	5.563 141.3	5.88 149.4	12.38 314.5	0.43 10.9	6.01 152.7	8.57 217.7	7.87 200	—	—	21.0 9.5
165.1 mm	6.500 165.1	5.88 149.4	13.41 340.6	1.00 25.4	7.51 190.8	9.32 236.7	7.87 200	1.60 40.6	1.88 47.8	26.5 12.0
6 150	6.625 168.3	5.88 149.4	13.41 340.6	1.00 25.4	7.51 190.8	9.32 236.7	7.87 200	1.60 40.6	1.88 47.8	26.5 12.0
8 200	8.625 219.1	5.33 135.4	16.50 419.1	1.27 32.3	9.65 245.1	10.98 278.9	9.84 250	0.00 * 0.0 *	0.68 17.3	43.0 19.5
10 250	10.750 273.0	6.40 162.6	19.14 486.2	1.72 43.7	12.20 309.9	16.19 411.2	9.84 250	—	—	80.0 36.3
12 300	12.750 323.9	6.50 165.1	21.54 547.1	2.66 67.6	14.25 362.0	17.22 437.4	9.84 250	—	—	102.0 46.3

* On Centerline

‡ These dimensions apply only to a Series 705W Butterfly Valve with a ½-inch NPT, supply-side tap

1. To prevent rotation of valves. it is recommended that Series 705W be installed with Victaulic Style 07 Zero-Flex®. Style 005 FireLock, Style 009/009V FireLock EZ, or Style HP-70 Rigid Couplings. If Victaulic flexible couplings are used. additional support may be required.
2. Valve must not be installed with disc in full open position. Disc must be partly closed so that no part is protruding beyond end of valve body.
3. Victaulic grooved end butterfly valves are permitted for use with grooved end pipe (IPS) only. Not permitted for use with plain end (IPS) pipe.
4. Series 705W valves are designed for ambient weather conditions as opposed to submersible service.

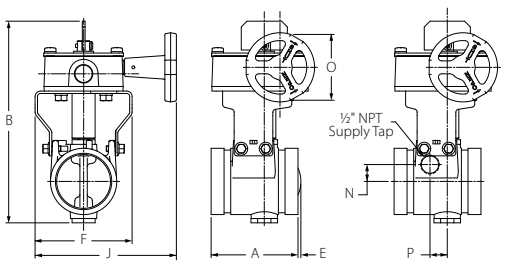

2½ – 4-INCH/65 – 100-MM SIZES

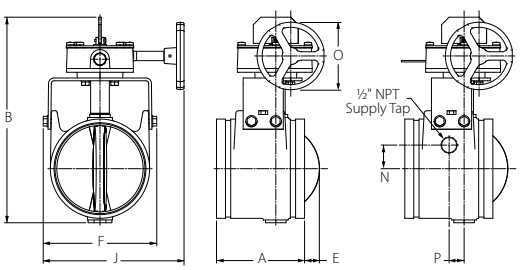

5 – 12-INCH/125 – 300-MM SIZES

VICTAULIC IS A REGISTERED TRADEMARK OF VICTAULIC COMPANY. © 2006 VICTAULIC COMPANY. ALL RIGHTS RESERVED. PRINTED IN THE USA..

FireLock® Butterfly Valve

SERIES 705W
WITH WEATHERPROOF ACTUATOR

PERFORMANCE

The chart expresses the frictional resistance of Victaulic Series 705W in equivalent feet/meters of straight pipe.

Size			Size		
Nominal Size Inches mm	Actual Outside Diameter Inches mm	Equiv. Feet/m of Pipe	Nominal Size Inches mm	Actual Outside Diameter Inches mm	Equiv. Feet/m of Pipe
2½ 65	2.875 73.0	5 1.6	165.1 mm	6.500 165.1	8 2.5
76.1 mm	3.000 76.1	5 1.6	6 150	6.625 168.3	8 2.5
3 80	3.500 88.9	5 1.6	8 200	8.625 219.1	11 3.4
4 100	4.500 114.3	12 3.7	10 250	10.750 273.0	12 3.7
139.7 mm	5.500 139.7	12 3.7	12 300	12.750 323.9	14 4.3
5 125	5.563 141.3	12 3.7			

MAXIMUM WORKINGS PRESSURE RATINGS

Size		Maximum Working Pressure by Agency			
Nominal Size Inches mm	Actual Outside Diameter Inches mm	cULus PSI	FM PSI	LPCB BAR	Vos BAR
2½ 65	2.875 73.0	300	300	20	16
76.1 mm	3.000 76.1	300	300	20	16
3 80	3.500 88.9	300	300	20	16
4 100	4.500 114.3	300	300	20	16
139.7 mm	5.500 139.7	300	300	20	16
5 125	5.563 141.3	300	300	20	16
165.1	6.500 165.1	300	300	20	16
6 150	6.625 168.3	300	300	20	16
8 200	8.625 219.1	300	300	20	16
10 250	10.750 273.0	300	300	20	16
12 300	12.750 323.9	300	300	20	16

VICTAULIC IS A REGISTERED TRADEMARK OF VICTAULIC COMPANY. © 2006 VICTAULIC COMPANY. ALL RIGHTS RESERVED. PRINTED IN THE USA.

FireLock® Butterfly Valve

SERIES 705W
WITH WEATHERPROOF ACTUATOR

PERFORMANCE

C_V values for flow of water at +60°F/+16°C with a fully open valve are shown in the table below. For additional details, contact Victaulic.

Formulas for C_V Values:

$$\Delta P = \frac{Q^2}{C_v^2}$$

$$Q = C_v \times \sqrt{\Delta P}$$

Where:
Q = Flow (GPM)
ΔP = Pressure Drop (psi)
C_v = Flow Coefficient

Size		C_V	Size		C_V	Size		C_V
Nominal Size Inches mm	Actual Outside Diameter Inches mm	(Full Open)	Nominal Size Inches mm	Actual Outside Diameter Inches mm	(Full Open)	Nominal Size Inches mm	Actual Outside Diameter Inches mm	(Full Open)
2½ 65	2.875 73.0	325	139.7 mm	5.500 139.7	1150	8 200	8.625 219.1	3400
76.1 mm	3.000 76.1	325	5 125	5.563 141.3	1150	10 250	10.750 273.0	5750
3 80	3.500 88.9	482	165.1 mm	6.500 165.1	1850	12 300	12.750 323.9	8300
4 100	4.500 114.3	600	6 150	6.625 168.3	1850			

Formulas for K_V Values:

$$\Delta P = \frac{Q^2}{K_v}$$

$$Q = K_v \times \sqrt{\Delta P}$$

Where:
Q = Flow $\left(\frac{m^3}{hr.}\right)$
ΔP = Pressure (bar)
K_v = Flow Factor

Size		K_V	Size		K_V	Size		K_V
Nominal Size Inches mm	Actual Outside Diameter Inches mm	(Full Open)	Nominal Size Inches mm	Actual Outside Diameter Inches mm	(Full Open)	Nominal Size Inches mm	Actual Outside Diameter Inches mm	(Full Open)
2½ 65	2.875 73.0	280	139.7 mm	5.500 139.7	995	8 200	8.625 219.1	2940
76.1 mm	3.000 76.1	280	5 125	5.563 141.3	995	10 250	10.750 273.0	4975
3 80	3.500 88.9	415	165.1 mm	6.500 165.1	1600	12 300	12.750 323.9	7180
4 100	4.500 114.3	520	6 150	6.625 168.3	1600			

VICTAULIC IS A REGISTERED TRADEMARK OF VICTAULIC COMPANY. © 2006 VICTAULIC COMPANY. ALL RIGHTS RESERVED. PRINTED IN THE USA..

FireLock® Butterfly Valve

SERIES 705W
WITH WEATHERPROOF ACTUATOR

SWITCH AND WIRING

1. The supervisory switch contains two, single pole, double throw, pre-wired switches.
2. Switches are rated:

   10 amps @ 125 or 250 VAC/60 Hz

   0.50 amps @ 125 VDC

   0.25 amps @ 250 VDC
3. Switches supervise the valve in the “open” position.
4. One switch has two #18 MTW wires per terminal, which permit complete supervision of leads (refer to diagrams and notes below). The second switch has one #18 MTW wire per terminal. This double circuit provides flexibility to operate two electrical devices at separate locations, such as an indicating light and an audible alarm, in the area that the valve is installed.
5. A #14 MTW ground lead (green) is provided.

   Switch #1 = S1 For connection to the supervisory circuit of a UL Listed alarm control panel

   Switch #2 = S2 Auxiliary switch that may be connected to auxiliary devices, per the authority having jurisdiction

S1
- Normally Closed: (2) Blue
- Common: (2) Yellow

S2
- Normally Closed: Blue with Orange Stripe
- Normally Open: Brown with Orange Stripe
- Common: Yellow with Orange Stripe

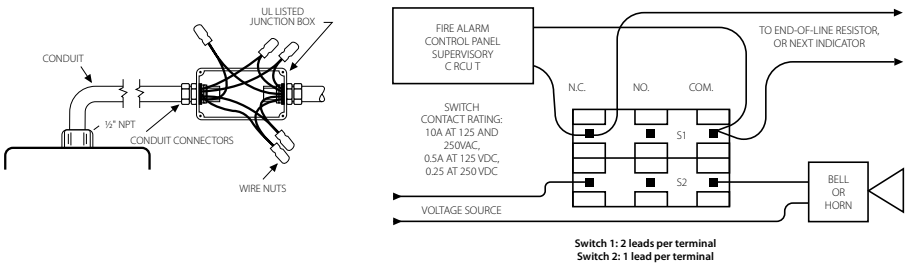

Switch 1: 2 leads per terminal
Switch 2: 1 lead per terminal

NOTE: The above diagram shows a connection between the common terminal (yellow – S1 and yellow-with-orange stripe – S2) and the normally closed terminal (blue – S1 and blue-with-orange stripe – S2). In this example, the indicator light and alarm will stay on until the valve is fully open. When the valve is fully open, the indicator light and alarm will go out. Cap off any unused wires (e.g. brown with orange stripe).

Only S1 (two leads per terminal) may be connected to the fire alarm control panel.

The connection of the alarm switch wiring shall be in accordance with NFPA 72 and the auxiliary switch per NFPA 70 (NEC).

VICTAULIC IS A REGISTERED TRADEMARK OF VICTAULIC COMPANY. © 2006 VICTAULIC COMPANY. ALL RIGHTS RESERVED. PRINTED IN THE USA.

FireLock® Butterfly Valve

SERIES 705W
WITH WEATHERPROOF ACTUATOR

WARRANTY

Refer to the Warranty section of the current Price List or contact Victaulic for details.

NOTE

This product shall be manufactured by Victaulic or to Victaulic specifications. All products to be installed in accordance with current Victaulic installation/assembly instructions. Victaulic reserves the right to change product specifications. designs and standard equipment without notice and without incurring obligations.

INSTALLATION

Reference should always be made to the installation sheet included with the valve. Verify you have the latest revision by visiting our website at www.victaulic.com. Further reference can be found in the I-100 Victaulic Field Installation Handbook.

WCAS-6ZAQT8

10.18 2466 REV G UPDATED 7/2007

VICTAULIC IS A REGISTERED TRADEMARK OF VICTAULIC COMPANY. © 2006 VICTAULIC COMPANY. ALL RIGHTS RESERVED. PRINTED IN THE USA.

MUELLER® O.S.&Y. Resilient Wedge Gate Valve

❑ R-2360-6: O.S.&Y. RESILIENT WEDGE GATE VALVE WITH FLANGE ENDS

- 2-1/2", 3", 4", 6", 8", 10" AND 12" SIZES
- MEETS OR EXCEEDS ALL APPLICABLE REQUIREMENTS OF UL 262 AND FM 120/1130 SPECIFICATIONS AND COMPLIES WITH NSF-61
- IRON BODY WITH MUELLER® PRO-GARD™ FUSION EPOXY COATED INTERIOR & EXTERIOR SURFACES
- OUTSIDE SCREW AND YOKE (O.S.&Y.)
- FLANGED END DIMENSIONS AND DRILLING
- RUBBER ENCAPSULATED IRON WEDGE
- ADJUSTABLE PACKING
- HANDWHEEL – OPEN LEFT OR OPEN RIGHT
- 200 PSIG (1379KPA) MAXIMUM WORKING PRESSURE 400 PSIG (2758 KPA) STATIC TEST
- EPOXY COATING MEETS OR EXCEEDS ANSI/AWWA C550 AND COMPLIES WITH NSF-61

Options

- STAINLESS STEEL FASTENERS: TYPE 304 OR 316
- ASTM B98-C66100/H02 STEM

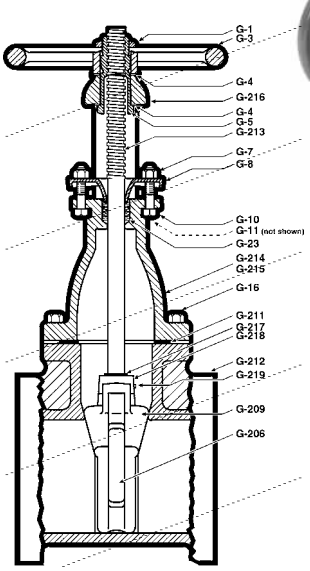

PARTS LIST

Catalog Part No.	Description	Material	Material Standard
G-1	Cap Nut	Bronze	ASTM B62
G-3	Hand Wheel	Cast Iron	ASTM A126 CL.B
G-4	Washer	Brass	
G-5	Bush Nut	Bronze	ASTM B584
G-7	Gland Nut	Bronze	ASTM B21 Alloy 464
G-8	Packing Gland	Ductile Iron	ASTM A536 Grade 65-45-12
G-10	Gland Bolt	Stainless Steel	Type 304
G-11††	Yoke Bolt & Nut	Stainless Steel	Type 304
G-16	Bonnet Bolts & Nuts	Stainless Steel	Type 304
G-23	Stem Packing	Lubricated Flax	
G-206	Guide Cap Bearings	Celcon	
G-209	Wedge, Rubber Encapsulated	Cast Iron**	ASTM A126 CL.B
G-211	Bonnet Gasket	Rubber	ASTM D2000
G-212	Body	Cast Iron	ASTM A126 CL.B
G-213	Stem	Bronze	ASTM B138
G-214†	Bonnet & Yoke w/Bushing	Cast Iron	ASTM A126 CL.B
G-215††	Bonnet	Cast Iron	ASTM A126 CL.B
G-216††	Yoke	Cast Iron	ASTM A126 CL.B
G-217	O-ring	Nitrile	ASTM D2000
G-218	Disc Nut	Bronze	ASTM B62
G-219	Stem Nut Pin	Stainless Steel	Type 304

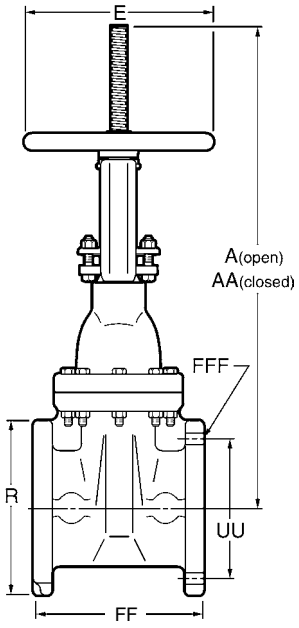

DIMENSIONS

Dimension*	Size 2-1/2"	3"	4"	6"	8"	10"	12"
A	19.50"	19.25"	23.68"	31.38"	38.50"	47.00"	53.50"
AA	15.75"	15.50"	19.00"	24.50"	29.50"	35.75"	40.50"
E	7.00"	7.00"	10.00"	12.00"	14.00"	16.00"	16.00"
R	7.00"	7.50"	9.00"	11.00"	13.50"	16.00"	19.00"
FF	7.50"	8.00"	9.00"	10.50"	11.50"	13.00"	14.00"
UU	5.50"	6.00"	7.50"	9.50"	11.75"	14.25"	17.00"
FFF (number and size of holes)	4--.75"	4--.75"	8--.75"	8--.88"	8--.88"	12--1"	12--1"
Turns to open	11	11	14	20.5	27	33.5	39
Weight (lbs.)*	68	72	130	194	289	448	596

See page B-1-22 for ordering insturctions.

*All dimensions are in inches. All weights are in pounds and are approximate.
** Fully encapsulated in molded rubber with no iron exposed.
† 2-1/2" - 6" sizes have a one-piece bonnet & yoke.
††8" - 12" sizes have a two-piece bonnet & yoke.

PROJECT INFORMATION	APPROVAL STAMP
Project:	❑ Approved
Address:	❑ Approved as noted
Contractor:	❑ Not approved
Engineer:	**Remarks:**
Submittal Date:	
Notes 1:	
Notes 2:	